SYMBOLIC ANALYSIS OF MICROWAVE CIRCUITS

Dejan V. Tošiæ, Antonije R. Djordjeviæ, Branimir D. Reljin

Faculty of Electrical Engineering, University of Belgrade, Yugoslavia
Bulevar revolucije 73, PO BOX 816, 11001 BELGRADE, YUGOSLAVIA
etosicde@ubbg.etf.bg.ac.yu

Abstract

Computer-aided symbolic analysis is proposed to derive closed-form, analytical expressions for transfer functions and characteristics of linear time-invariant microwave circuits. All of some of the circuit parameters are specified by symbols, and the circuit response is derived as a set of symbolic expressions in terms of these symbols and the frequency. The original program SASP to carry out symbolic analysis is presented. The underlining concept is illustrated by examples.

1. INTRODUCTION

At lower frequencies classical electronic devices can be modeled by time-invariant, linear, electric networks containing lumped elements. Usually, two-port devices are of much greater interest. They are described by its primary parameters: immitance (*z* and *y*), hybrid (*h* and *k*) and transmission (*a* or ABCD), or by the derived (secondary) ones: input (output) immitance, gain, attenuation etc.

At higher (microwave) frequencies lumped element modeling is not adequate because elements' dimensions are comparable to the signal wavelength. To characterize these devices, the most suitable (and from the measurement viewpoint the only directly measurable) are *S*-parameters (*scattering* parameters). *S*-parameters of time-invariant linear electric networks, containing transmission lines and waveguides, are numerically determined by software tools like: COMPACT [1], TOUCHSTONE [2], LINPAR [3], LINRES [4] and MATPAR [5].

This paper presents a concise, comprehensive theoretical background, the complete procedure, and the program implementation for computer-aided symbolic analysis of time-invariant, linear, electric circuits and networks containing microwave components specified by scattering parameters.

2. PROBLEM STATEMENT AND RESEARCH MOTIVATION

In order to find complex wave signals of a (microwave) circuit, whose elements are described by *S*-parameters, a set of circuit equations must be formulated. This system of equations reflects element characteristics expressed in terms of *S*-matrices and topological relations involving incident and reflected waves at the port connections (nodes). Some circuit elements may be characterized by analytic equations, some are specified by measured data sets corresponding to the frequency range of interest. “Manual” derivation of the circuit response is lengthy, time-consuming and error-prone.

So, it is desirable to: (1) define a simulation language and the **knowledge base** (rules) for the analysis of linear, time-invariant electric circuits specified by *S*-parameters, (2) develop a symbolic **simulator** for the circuit response/characteristic derivation analytically, in closed-form, as symbolic expressions, (3) formulate and implement an **algorithm** for automated symbolic calculation of complex wave signals, incident and reflected, at each port.

The motive of the research is the desire to provide an efficient and reliable tool for automated evaluation and comparison of different microwave circuits, network analyzer test setups and measurement calibration procedures. It is targeted at analysis, design, measurement and education.

4. EXISTING SOLUTIONS AND THEIR CRITICISM

Traditionally, circuits described by S-parameters are analyzed:

- "manually" - that is time-consuming, error-prone, unreliable and constrained to circuits having several elements,
- with the help of numerical simulators (like COMPAC/TOUCHSTONE) - analysis is repeated for each frequency, results are in the form of tables of numbers, there is no insight into system behavior and parameter interaction.

5. PROPOSED SOLUTION AND ITS ESSENCE

Computer-aided symbolic analysis is proposed to derive closed-form, analytical, symbolic expressions for circuit transfer functions and characteristics. Calculation of complex wave signals is carried out at all ports, in the symbolic form, in terms of *S*-parameters given by symbols. The original program **SASP** has been developed to symbolically simulate linear, time-invariant electric circuit specified by *S*-parameters. It is a reliable tool for automated analysis, design and evaluation, especially in microwave measurement, testing, deembeding, calibration and error analysis due to device imperfections. The program **SASP** is developed in the *Mathematica* programming language [6].

The **SASP** syntax for element specification is given by the list of the form:

```
component[k] = {"S", "name", port, {S, bg, Z}}
```

where: *k* represents the unique component number, *name* stands for the individual unique component name, *port* is a list of the numbers of ports to which the component is connected, `port={n1,n2,...}`, *S* is the matrix of scattering parameters, `S={{S11,S12,S13,...},{S21,S22,S23,...}, ...}`, `bg={bg1,bg2,bg3,...}` is a list of outgoing waves due to

sources inside the element, and `Z={Z1,Z2,Z3,...}` is a list of reference impedances of the ports.

6. A SIMPLE EXAMPLE OF SYMBOLIC SIMULATION WITH SASP

The circuit in Fig. 1 consists of a generator (independent source), a three-port circulator and two one-port loads. It is a typical microwave RF transmitter/receiver setup found in telecommunication or radar systems. In order to examine the influence of mismatch at all three ports it is assumed that the generator and the loads have non zero reflection.

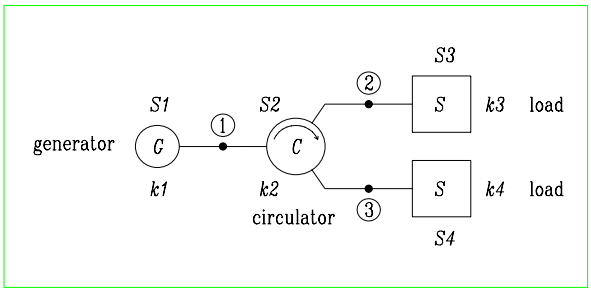

Figure 1. A simple microwave transmitter/receiver setup.

The circuit is described by its netlist in an ASCII text file `CIR2LOAD.P`

```
(* CIR2LOAD.P  circulator & 2 loads  9:53  1/11/95 *)
numberofnodes=3
component[1]={"S", "S1", {1}, {{{Sg}}, {Z0}, {bg}}}
component[2]={"S", "S2", {1,2,3}, {{{0,0,1},{1,0,0},{0,1,0}}, {Z0,Z0,Z0}, {0,0,0}}}
component[3]={"S", "S3", {2}, {{{Sp1}}, {Z0}, {0}}}
component[4]={"S", "S4", {3}, {{{Sp2}}, {Z0}, {0}}}
numberofcomponents=4
(* CIR2LOAD.P eof *)
```

The file is passed to SASP for symbolic analysis. Reflected complex wave signals are found for all ports. The analysis results follow. Text set in **`Courier bold`** face denotes the *Mathematica* commands, text set in `Courier plain` represents the results of the command execution.

```
SetDirectory["H:\SASP\MA"]; Get["SASP.M"];
SASP 1.0 Dejan V. Tosic (c)1995 ETF Beograd
!! cir2load.P
time = Timing[SASP["cir2load.P"];]; Print[time[[1]]];

(* CIR2LOAD.P  circulator & 2 loads  9:53  1/11/95 *)
numberofnodes=3
component[1]={"S", "S1", {1}, {{{Sg}}, {Z0}, {bg}}}
component[2]={"S", "S2", {1,2,3}, {{{0,0,1},{1,0,0},{0,1,0}}, {Z0,Z0,Z0}, {0,0,0}}}
component[3]={"S", "S3", {2},     {{{Sp1}}, {Z0}, {0}}}
```

```
component[4]={"S", "S4", {3},     {{{Sp2}}, {Z0}, {0}}}
numberofcomponents=4
(* CIR2LOAD.P eof *)

(* ANALYSIS RESULTS *)

                 bg                                    bg Sp1
b1(k1p1) = --------------              b4(k3p2) = --------------
           1 - Sg Sp1 Sp2                         1 - Sg Sp1 Sp2

             bg Sp1 Sp2                                bg Sp1
b2(k2p1) = --------------              b5(k2p3) = --------------
           1 - Sg Sp1 Sp2                         1 - Sg Sp1 Sp2

                 bg                                  bg Sp1 Sp2
b3(k2p2) = --------------              b6(k4p3) = --------------
           1 - Sg Sp1 Sp2                         1 - Sg Sp1 Sp2

(simulation time 3.85 seconds)
```

The analysis reveals the influence of particular parameters on reflected complex wave signals. The signals are numbered from 1 to 6. The corresponding component and the port are indicated in brackets. For example, `b1(k1p1)` means: reflected (outgoing) complex wave signal of the component *k1* (i.e. the generator) whose port is connected to the node 1. In a similar way, `b3(k2p2)` designates the outgoing signal of the circulator (component *k2*) at the circulator port connected to the node 2. It is clearly seen that the generator reflection coefficient, **Sg**, has no influence on the response until both loads are imperfect, having non-zero reflection. In the ideal case, when all the ports (devices) are matched, the response is derived from this general case, substituting `Sg=Sp1=Sp2=0`, which yields:

```
b1(k1p1) = bg,  b2(k2p1) = 0,  b3(k2p2) = bg,
b4(k3p2) = 0,   b5(k2p3) = 0,  b6(k4p3) = 0
```

This simple example illustrates the advantages of symbolic analysis using S-parameters. The response is found analytically as a closed-form symbolic expression in terms of circuit parameters given by symbols. The circuit is analyzed once, for the general case. Other, specific cases are derived from the general case by substituting numeric values for the symbols representing the circuit parameters. The analytic form of the response makes possible to investigate the influence and contribution of particular parameters and components. It can be used for behavioral analog

modeling of devices and networks. It can serve to an engineering expert or a novice designer in the process of prototyping a microwave system or measurement setup layout.

7. APPLICATION EXAMPLE: SYMBOLIC ANALYSIS OF A 4-ELEMENT BUTLER MATRIX

Design and analysis of multiple beam electronically scanned antennas and phased array systems often involve the Butler matrices as building blocks [7,8]. This paper presents a new approach of automated computer-aided symbolic analysis to the problem.

The Butler matrix components, generator (GEN), phase shifter (PHS), quadrature hybrid coupler (QHC) and double phase shifter (DPS), are shown in Fig. 2. The Butler matrix is shown in Fig. 3.

Let the column vectors $\mathbf{a}$ and $\mathbf{b}$ represent the incident (ingoing) and reflected (outgoing) complex wave signals, respectively. Let the column vector $\mathbf{b}_{\mathrm{g}}$ stand for equivalent outgoing complex wave signals due to generators inside networks. The constitutive equation of an element (the element characteristics) is given by the general matrix formula $\mathbf{b} = \mathbf{S}\mathbf{a} + \mathbf{b}_{\mathrm{g}}$. The reference (nominal) impedances for each port must be given.

According to the port numbering in Fig. 2 the elements definitions for the generator, the phase shifter, the double phase shifter and the quadrature hybrid coupler, are:

$$\mathbf{S}_{\mathrm{GEN}} = \left[S_{\mathrm{g}}\right],\ \mathbf{b}_{\mathrm{gGEN}} = \left[b_{\mathrm{g}}\right],\ S_{\mathrm{g}} = 0 \text{ for the matched generator,}$$

$$\mathbf{S}_{\mathrm{PHS}} = \begin{pmatrix} s & \\ & 0 \end{pmatrix},\ s = \mathrm{e}^{\mathrm{j}\varphi},\ \mathbf{b}_{\mathrm{gPHS}} = \begin{pmatrix} \\ \end{pmatrix}$$

$$\mathbf{S}_{\mathrm{DPS}} = \begin{pmatrix} A & 0 & 0 & \\ 0 & 0 & 0 & \\ 0 & 0 & B & \\ 0 & B & 0 & \end{pmatrix},\ \begin{matrix} A = \mathrm{e}^{\mathrm{j}\alpha} \\ B = \mathrm{e}^{\mathrm{j}\beta} \end{matrix},\ \mathbf{b}_{\mathrm{gDPS}} = \begin{pmatrix} \\ \\ \\ \\ \end{pmatrix}$$

$$\mathbf{S}_{\mathrm{QHC}} = \frac{1}{\sqrt{2}} \begin{pmatrix} 1 & 0 & \mathrm{j} & \\ 0 & \mathrm{j} & 0 & \\ \mathrm{j} & 0 & 1 & \\ 0 & 1 & 0 & \end{pmatrix},\ \mathbf{b}_{\mathrm{gQHC}} = \begin{pmatrix} \\ \\ \\ \\ \end{pmatrix}.$$

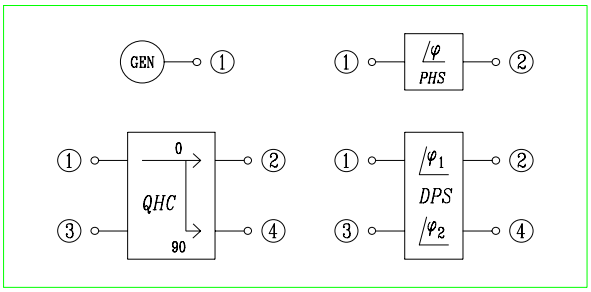

Figure 2. The Butler matrix components.

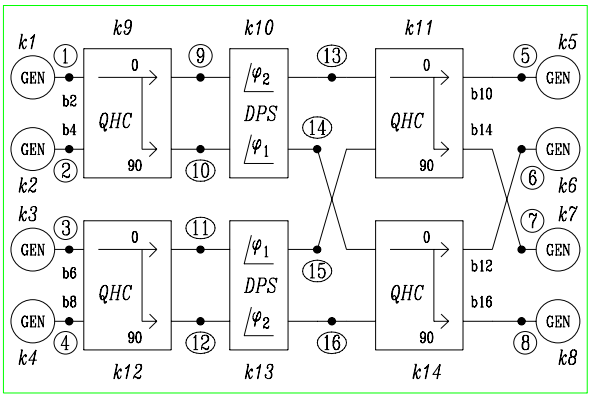

Figure 3. The 4-element Butler matrix.

The program **SASP** will analyze the circuit symbolically and find reflected complex wave signals at all ports.

```
SASP["BM4.P"]
SASP 1.0 Dejan V. Tosic (c)1995 ETF Beograd
numberofnodes=16
component[1]={"S","GEN1",{1},{{{0}},{Zc},{a1}}}
component[2]={"S","GEN2",{2},{{{0}},{Zc},{a2}}}
component[3]={"S","GEN3",{3},{{{0}},{Zc},{a3}}}
component[4]={"S","GEN4",{4},{{{0}}, Zc},{a4}}}
component[5]={"S","GEN5",{5},{{{0}},{Zc},{a5}}}
component[6]={"S","GEN6",{6},{{{0}},{Zc},{a6}}}
component[7]={"S","GEN7",{7},{{{0}},{Zc},{a7}}}
component[8]={"S","GEN8",{8},{{{0}},{Zc},{a8}}}
component[9]={"S", "QHC1", {1,9,2,10},
{(1/Sqrt[2])*{{0,1,0,I}, {1,0,I,0}, {0,I,0,1}, {I,0,1,0}}, {Zc,Zc,Zc,Zc},
{0,0,0,0}}}
component[10]={"S", "DPS1", {9,13,10,14}, {{{0,B,0,0}, {B,0,0,0}, {0,0,0,A},
{0,0,A,0}}, {Zc,Zc,Zc,Zc}, {0,0,0,0}}}
component[11]={"S", "QHC2", {13,5,15,7},
{(1/Sqrt[2])*{{0,1,0,I}, {1,0,I,0}, {0,I,0,1}, {I,0,1,0}}, {Zc,Zc,Zc,Zc},
{0,0,0,0}}}
component[12]={"S", "QHC3", {3,11,4,12},
{(1/Sqrt[2])*{{0,1,0,I}, {1,0,I,0}, {0,I,0,1}, {I,0,1,0}}, {Zc,Zc,Zc,Zc},
{0,0,0,0}}}
component[13]={"S", "DPS2", {11,15,12,16},
{{{0,A,0,0}, {A,0,0,0}, {0,0,0,B}, {0,0,B,0}}, {Zc,Zc,Zc,Zc}, {0,0,0,0}}}
component[14]={"S", "QHC4", {14,6,16,8},
{(1/Sqrt[2])*{{0,1,0,I}, {1,0,I,0}, {0,I,0,1}, {I,0,1,0}}, {Zc,Zc,Zc,Zc},
{0,0,0,0}}}
```

```
numberofcomponents=14

(* SYMBOLIC ANALYSIS RESULTS *)
b1(k1p1) = a1
b2(k9p1) = (I A a6 - A a8 + a5 B +
I a7 B)/2
b3(k2p2) = a2
b4(k9p2) = (A a6 + I A a8 + I a5 B
- a7 B)/2
b5(k3p3) = a3
b6(k12p3) = (I A a5 + A a7 - a6 B
+ I a8 B)/2
b7(k4p4) = a4
b8(k12p4) = (-(A a5) + I A a7 + I
a6 B + a8 B)/2
b9(k5p5) = a5
b10(k11p5) = (I A a3 - A a4 + a1 B
+ I a2 B)/2
b11(k6p6) = a6
b12(k14p6) = (I A a1 + A a2 - a3 B
+ I a4 B)/2
b13(k7p7) = a7
b14(k11p7) = (A a3 + I A a4 + I a1
B - a2 B)/2
b15(k8p8) = a8
b16(k14p8)= (-(A a1) + I A a2 + I
a3 B + a4 B)/2
b17(k9p9) = (a1 + I a2) / Sqrt[2]
b18(k10p9) = (a5 + I a7) B /
Sqrt[2]
b19(k9p10) = (I a1 + a2) / Sqrt[2]
b20(k10p10) = A (a6 + I a8) /
Sqrt[2]
b21(k12p11) = (a3 + I a4) /
Sqrt[2]
b22(k13p11) = A (I a5 + a7) /
Sqrt[2]
b23(k12p12) = (I a3 + a4) /
Sqrt[2]
b24(k13p12) = (I a6 + a8) B /
Sqrt[2]
b25(k10p13) = (a1 + I a2) B /
Sqrt[2]
b26(k11p13) = (a5 + I a7) /
Sqrt[2]
b27(k10p14) = A (I a1 + a2) /
Sqrt[2]
b28(k14p14) = (a6 + I a8) /
Sqrt[2]
b29(k11p15) = (I a5 + a7) /
Sqrt[2]
b30(k13p15) = (A (a3 + I a4)) /
Sqrt[2]
b31(k13p16) = (I a3 + a4) B /
Sqrt[2]
b32(k14p16) = (I a6 + a8) /
Sqrt[2]
(CPU time 18.13 Seconds, PC-
i486/DX50)
```

SASP finds reflected complex wave signals at all ports. The corresponding component and the port are indicated in brackets. For example, `b2(k9p1)` designates the outgoing signal of the coupler (component *k9*) at the coupler port connected to the node 1.

The 4-element Butler matrix, Fig. 3, is an 8-port microwave network (removing the 8 generators). To find the corresponding *S*-matrix the matched test sources are connected to excite the circuit in Fig. 3. Their intrinsic outgoing signals are incident to the Butler network and are designated by *a*1 through *a*8. The response of interest are the complex waves reflected at the ports 1,2,3,4,5,6,7, and 8, belonging to the Butler matrix. **SASP** numbers these signal as *b*2,*b*4,*b*6,*b*8,*b*10,*b*12,*b*14,*b*16 and finds the *S*-parameter matrix. Its output, in text form, follows. The imaginary unit is designated by I.

```
                                B     I     I     -A
                                -     - A   - B   --
0     0     0     0     2     2     2     2

                                I     A     -B    I
                                - B   -     --    - A
0     0     0     0     2     2     2     2

                                I     -B    A     I
                                - A   --    -     - B
0     0     0     0     2     2     2     2

                                -A    I     I     B
                                --    - B   - A   -
0     0     0     0     2     2     2     2

B     I     I     -A
-     - B   - A   --
2     2     2     2     0     0     0     0

I     A     -B    I
- A   -     --    - B
2     2     2     2     0     0     0     0

I     -B    A     I
- B   --    -     - A
2     2     2     2     0     0     0     0

-A    I     I     B
--    - A   - B   -
2     2     2     2     0     0     0     0
```

The components are assumed to be ideal, perfect, lossless matched, etc., in order to demonstrate the power of symbolics in the simplest way. It is obvious that **each** element of an *S*-matrix can be given by a symbol! Thus, imperfections and mismatches can be readily taken into account symbolically and analyzed, having the full insight into their influence on the characteristics/response. The closed-form symbolic expressions can be further post-processed using measured data to substitute for symbols representing *S*-parameters. It is important that the post-processing involves the final analytical expressions for the characteristic or response.

6. CONCLUSION

Computer-aided symbolic analysis is proposed to derive closed-form, analytical, symbolic expressions for transfer functions and characteristics of microwave circuits. The symbolic analysis is performed only **once**, for the general case. In the numerical simulation, for each frequency or parameter modifications the **complete** analysis must be run, repeating the same numerical procedure over and over. In optimization algorithms the closed-form expressions, provided by the new symbolic simulator **SASP**, can be invaluable to shorten the simulation time. In short, symbolics should be used whenever the problem can be solved analytically, i.e. when the closed-form solution exists and can be found in finite number of steps. The symbolic results can be, if required, compiled into a standard FORTRAN, C, or C++ code, to be used with numerically oriented analysis/optimization algorithms.

REFERENCES

[1] COMPACT Technical Reference Manual, Compact Engineering (Div. of CGIS), Palo Alto, California, 1979.

[2] TOUCHSTONE User's Manual, EE Soft Inc., 1990.

[3] A. R. Djordjeviæ et al., "Matrix Parameters for Multiconductor Transmission Lines", Norwood, MA, Artech House, 1989.

[4] A. R. Djordjeviæ et al., "Time Domain Response of Multiconductor Transmission Lines", Norwood, MA, Artech House, 1989.

[5] A. R. Djordjeviæ et al., "Scattering Parameters of Microwave Networks with Multiconductor Transmission Lines", Norwood, MA, Artech House, 1990.

[6] Stephen Wolfram, Mathematica: "A System for Doing Mathematics by Computer", Second Edition, Addison - Wesley, 1991.

[7] J. Butler, “Multiple beam antenna,” Sanders Associates, Nashua, H. H., Memorandum no RF-3849, Jan. 1960.

[8] J. Butler, R. Lowe, “Beam forming matrix simplifies design of electronically scanned antennas,” Electronic Design, vol. 9, Apr. 1961.