ENTIRE-DOMAIN ANALYSIS OF HIGH PERMITTIVITY / CONDUCTIVITY 3D DIELECTRIC SCATERERS

Branislav M. Notaros and Branko D. Popovic

University of Belgrade
Department of Electrical Engineering
P.O. Box 816, 11001 Belgrade, Yugoslavia
e-mail: bnotaros@kiklop.etf.bg.ac.yu, ebdp@ubbg.etf.bg.ac.yu

Abstract

The analysis of 3D scatterers made of dielectric of high permittivity and/or high conductivity is performed by means of an entire-domain moment-method, based on the Galerkin-type solution of the volume integral equation, with the current density vector as the unknown. The dielectric bodies are modelled by large trilinear hexahedrons with 3D polynomial current approximation. The results obtained by the entire-domain method are in very good agreement with those obtained by the existing subdomain methods. However, the entire-domain approach results in a much more efficient analysis when compared with the subdomain approach. For instance, the entire-domain method enables the solution of a problem of coupling between a wire antenna and a human body on a PC in a few minutes.

1. INTRODUCTION

Numerical analysis of possibly lossy 3D dielectric scatterers is an important problem of applied electromagnetism. Practically all available general methods for the analysis of such scatterers are of subdomain type, i.e., low-order basis functions in electrically small geometrical elements are used, resulting in a very large number of unknowns to be determined [1-13]. Consequently, serious problems are frequently encountered concerning the computer memory requirements and the necessary CPU time.

Relatively recently, a general entire-domain moment-method was proposed for the analysis of 3D dielectric scatterers [14,15,16]. The method is based on solving the volume integral equation with the polarization/conduction current-density vector as the unknown. The approximation of the scatterer geometry is performed by means of so-called trilinear hexahedrons. This is a body with straight edges and curved sides, completely defined by its eight vertices. The hexahedrons, theoretically, may be of arbitrary electrical size. The current density vector is approximated by extremely flexible entire-domain three-dimensional power series in generally non-orthogonal local parametric coordinates. The basis functions are constructed which satisfy automatically the continuity condition for the normal component of the equivalent displacement vector on adjacent surfaces of hexahedrons. This prevents fictitious

surface charges to appear in the numerical solution on the surfaces shared by hexahedrons made of the same dielectric. The unknown coefficients are determined by the Galerkin method. Combined analytical/numerical procedures have been devised for efficient evaluation of the two- and three-dimensional integrals.

This paper focuses the analysis of high-permittivity and/or high-conductivity 3D dielectric scatterers, which, of course, are of great practical interest. Some reference examples are the high-permittivity ceramic components, imperfect conductors, and electromagnetic systems that include biological tissues. On the other hand, in the case of large values of the dielectric parameters the convergence rate of some iterative methods slows down sigfnificantly, and the results are rather unreliable, [17,6,12]. The paper demostrates the accuracy, efficiency and reliability of the novel, entire-domain method in the analysis of such dielectric scatterers, and, in particular, its great superiority over the usual, subdomain methods.

2. THEORY

We first briefly present the theoretical basis and the pricipal steps of the analysis method.

Consider an inhomogeneous, lossy dielectric body, situated in a vacuum. It may consist of several parts, possibly in contact with one another. Assume that the permittivity and conductivity of the dielectric, ε and σ, are known functions of the space coordinates, and that $\mu = \mu_o$. Finally, let the body be excited by a time harmonic incident field, of complex electric field intensity $\boldsymbol{E_i}$ and angular frequency ω.

The incident field induces volume polarization and conduction currents, of total density $\boldsymbol{J}$, in the volume of the dielectric body. These currents can be considered in a vacuum, so that the secondary (scattered) electric field, $\boldsymbol{E}$, due to them can be expressed in terms of the retarded Lorentz potentials, $\boldsymbol{A}$ and $\boldsymbol{\Phi}$. The surface and volume charge densities in the expression for the scalar-potential are expressed in terms of $\boldsymbol{J}$ by the continuity equation. We thus obtain

$$\boldsymbol{E} = \boldsymbol{E}(\boldsymbol{J}) = -\mathrm{j}\omega\boldsymbol{A} - \mathrm{grad}\Phi\,, \tag{1}$$

$$\boldsymbol{A} = \int_V \boldsymbol{J} g \mathrm{d}V\,, \tag{2}$$

$$\Phi = \frac{\mathrm{j}}{\omega\varepsilon_0}\left[\int_V \mathrm{div}\boldsymbol{J} g \mathrm{d}V + \int_{S_\mathrm{d}} \boldsymbol{n}\cdot(\boldsymbol{J}_1 - \boldsymbol{J}_2) g \mathrm{d}S\right], \tag{3}$$

where V ans S_d are the domain of the electric body and the surface of discontinuity in the dielectric properties, respectively, and $\boldsymbol{n}$ is the unit vector on S_d, directed into the dielectric labeled 1. The free-space Green's function, g, is given by

$$g = \frac{e^{-\mathrm{j}\beta_0 R}}{4\pi R},\ \beta_0 = \omega\sqrt{\varepsilon_0\mu_0} = 2\pi/\lambda_0\,. \tag{4}$$

R is the distance of the field point from the source point, while β_o and λ_o are thee free space propagation coefficient and wavelength, respectively.

The volume current density inside the dielectric can be expressed in terms of the total electric field by the generalized Ohm's law,

$$\boldsymbol{J} = \sigma_\mathrm{e}\left[\boldsymbol{E}_\mathrm{i} + \boldsymbol{E}(\boldsymbol{J})\right],\ \sigma_e = \sigma + \mathrm{j}\omega(\varepsilon - \varepsilon_0)\,, \tag{5}$$

where σ_e is the dielectric equivalent complex conductivity. This is the volume integral equation with $\boldsymbol{J}$ as unknown, which we solve by means of the method of moments [18].

As the basic volume element for the approximation of dielectric bodies we adopt a trilinear hexahedron [14,16], sketched in Fig.1. This is a body defined uniquely by its eight vertices, which can be positioned in space arbitrarily. The parametric equation of the hexahedron in a local (generally non-orthogonal) u - v - w coordinate system in the figure reads

$$\mathbf{r}(u, v, w) = \mathbf{r}_c + \mathbf{r}_u u + \mathbf{r}_v v + \mathbf{r}_w w +$$
$$\mathbf{r}_{uv} uv + \mathbf{r}_{uw} uw + \mathbf{r}_{vw} vw + \mathbf{r}_{uvw} uvw, \quad -1 <= u, v, w <= 1, \tag{6}$$

where $\mathbf{r}(u, v, w)$ is the position vector of a hexaedron point, and $\mathbf{r}_c$, $\mathbf{r}_u$, $\mathbf{r}_v$, $\mathbf{r}_w$, $\mathbf{r}_{uv}$, $\mathbf{r}_{uw}$, $\mathbf{r}_{vw}$ and $\mathbf{r}_{uvw}$ are constant vectors that can be expressed in terms of the position vectors of the hexahedron vertices, $\mathbf{r}_{111}$, ...,$\mathbf{r}_{222}$. The hexahedron edges are straight, but its sides in the general case are curved (so-called bilinear quadrilaterals).

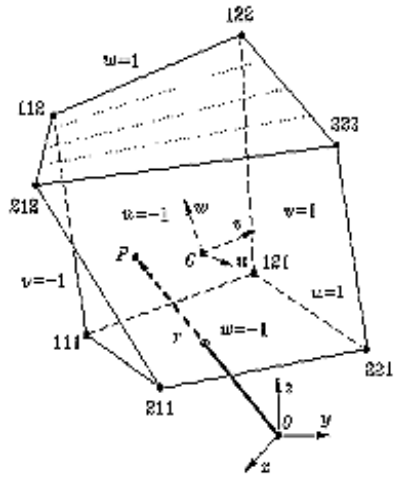

Figure1. Trilinear hexahedron

For the approximation of individual components of $\boldsymbol{J}$, we adopt as basis functions the terms of the form u^i v^j w^k of arbitrary degree in u, v and w. Such entire-domain basis functions are very simple, but also extremely flexible. Using these basis functions as fundamental, the polynomial series is constructed which satisfy automatically the continuity condition for normal components of vector $\varepsilon_e(\boldsymbol{E_i} + \boldsymbol{E})$ (the equivalent displacement vector) at any boundary surface of two hexahedrons in the geometrical model of the scatterer, where $\varepsilon_e = \varepsilon - j\sigma/\omega$ is the dielectric equivalent complex permitivity.

The unknown comlex current-distribution parameters (coefficients) are obtained by solving the volume equation (5) by means of the Galerkin technique [18]. For the method to be efficient, it was imperative to develop rapid and accurate numerical/analytical procedures for the evaluation of generalized Galerkin impedances (the elements of the system matrix) [14]. The resulting system of linear algebraic equations is solved classically, by the Gaussian elimination. Once the current distribution in the dielectric has been determined, other quantities of interest can be evaluated with ease.

3. RESULTS

3.1. Inner field of high-permittivity lossless dielectric sphere in incident plane wave

As the first numerical example, consider a homogeneous lossless sphere in the field of a linearly polarized plane wave incident from the direction $\theta_i = 0$ and with

$\boldsymbol{E_i}$ = $1e^{j\beta oz}$ $\boldsymbol{\iota_x}$ V/m (Fig.2). Let the frequency of the wave be f = 300 MHz, relative permittivity of the scatterer ε_r = 36, and the sphere radius, α, be defined by $\beta_o\alpha = 0.408$.

Fig.3 shows four curves representing the magnitude of the x-component of the

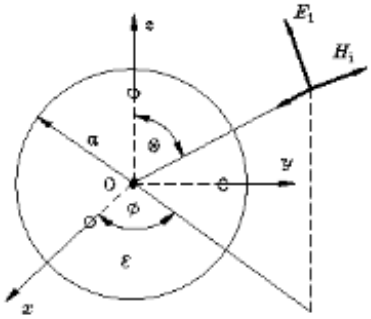

Figure 2. Spherical dielectric scatterer

total electric field, $\boldsymbol{E}_{tot}$, inside the sphere, along the z-axis. The first corresponds to the analytical solution in the form of Mie's series [3]. The second is obtained by the present method, by approximating the sphere with 3 x 3 x 3 = 27 trilinear hexahedrons, as shown in Figs.4a and 4b. This model is obtained by first approximating the sphere surface with 6 x (3 x 3) = 54 inscribed bilinear quadrilaterals, as in Fig.4a. The sphere volume was next divided into 27 parts by connecting the corresponding vertices of the quadrilaterals by straight lines parallel to the axis of the global rectangular coordinate system, as in Fig.4b. Finally, the coordinates of vertices are scaled to ensure that the volume of the model be equal to the volume of the sphere. Shown in Fig.4a are scaled coordinates of three vertices which define the entire structure completely. The adopted degrees of polynomials were 1 or 2, i.e., this was an almost subdomain approximation. With partial use of symmetry, this resulted in 344 unknowns and 4 minutes of CPU-time on PC- 486/66 MHz (8 MB RAM). It was not possible to accommodate a larger number of unknowns in all the hexahedrons with the available PC.

The last two curves are reference curves of other authors, obtained (1) with 3D rooftop basis functions in 512 small tetrahedrons (304 unknowns with maximal use of symmetry, and 35 CPU-minutes on VAX 11/780) [3], and (2) with 3D

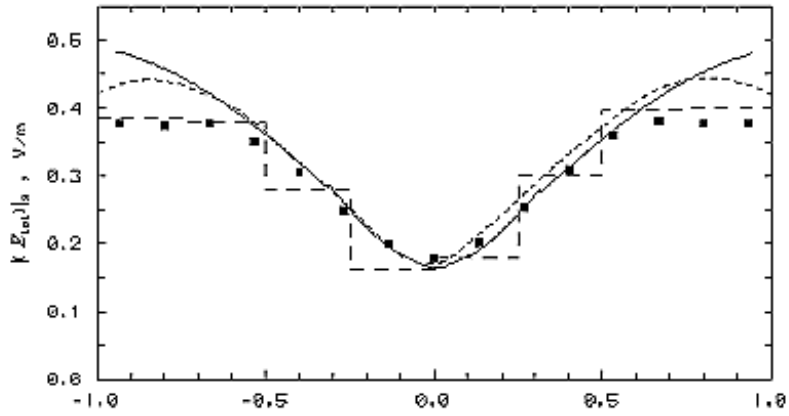

Figure 3. Magnitude of the x-component of the total electric field inside the homogeneous lossless dielectric sphere in Fig.2 ($\varepsilon_r = 36$, $\beta_o\alpha = 0.408$, $\boldsymbol{E_i} = 1e^{j\beta oz}\boldsymbol{\iota}_x$ V/m), along the z-axis
- - - - analytical solution, Mie's series [3]
—— this method, 27 elements, 344 unknowns
——— method [3], 512 elements, 304 unknowns
■ ■ ■ method [10], 3375 elements, 10800 unknowns

rooftop basis function in 3375 small cubes (10800 unknowns and 2 hours of CPU-time on VAX 3100/76 workstation) [10].

Fig.3 shows very good agreement of the results obtained by the proposed method with the analytical results, except near the surface of the sphere, where relatively inaccurate approximation of the sphere by bilinear quadrilaterals (Fig.4a), and possibly insufficient degree of the current approximation, evidently influences the solution. This agreement is on average better than that of the analytical results with the results obtained by the two reference subdomain methods. Note that the number of unknowns in the proposed method (344) is close to that in Ref.[3] (304), but much smaller than in Ref.[10] (10800).

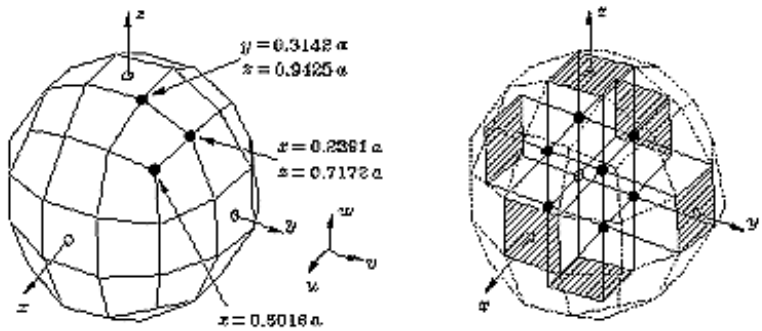

a b

Figure 4. Geometrical modelling of a homogeneous dielectric sphere with 27 trilinear hexahedrons. (a) The sphere surface is approximated by 54 bilinear quadrilaterals, and (b) the sphere volume is then divided into 27 parts.

3.2 Scattered far field of cubical scatterer made of imperfect conductor

Shown in Fig.5 is a homogeneous cubical scatterer made of an imperfect conductor [ε_r = 1 and σ = 16:69 S/m, i.e. ε_r = 1 - j1000 (σ / $\omega\varepsilon$ = 1000). A plane wave of frequency f = 300 MHz is incident rom the direction θ_i with $\boldsymbol{E}_i = 377e^{-j\beta oz}\boldsymbol{\iota}_x$ V/m, and the cube edge length α = 20 cm.

The cube can be modelled exactly by a single trilinear hexahedron. The fourth-degree polynomial current approximation was adopted. With this, the total number of unknowns amounted to 240, and the CPU time was 53 seconds on PC-486/66 MHz (8 MB RAM).

Fig.6 shows the scattered far field in planes φ = 0 (E-plane) and φ = 90° (H-plane), normalized with respect to its maximal value. The results are compared with those obtained by two different subdomain methods: (1) a method using 3D pulse basis functions in 512 small cubes (1536 unknowns) [8] and (2) a method using specific volume/surface rooftop basis functions in 512 small cubes (about 4600 unknowns) [9]. A good agreement between the three sets of results is observed, the present method requiring much less unknowns.

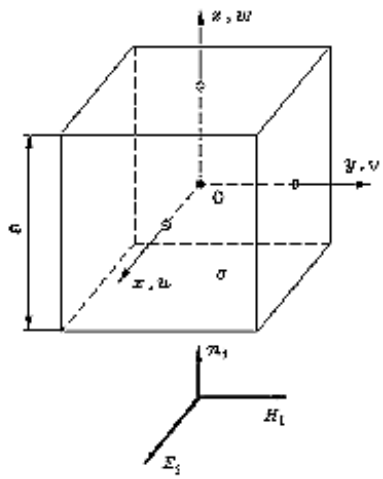

Figure 5. Homogeneous cubical scatterer made of imperfect conductor

3.3 Coupling between wire dipole-antenna and human body

As a final example, consider the influence of a man on the impedance of the antenna of a portable radio. The antenna is approximated by an equivalent symmetrical center-fed wire dipole without the telephone box (Figs.7 and 8). Let the frequency of the generator driving the antenna be f = 840 MHz, the dipole arm length h = 8:45 cm, and the radius of the wire α = 0.127 cm. The adopted model of man is

178 cm high, and is made of a homogeneous lossy dielectric of parameters $\varepsilon_r = 51.6$ and $\sigma = 1.56$ S/m, i.e. $\varepsilon_{er} = 51.6 - j33.38$. it is constructed

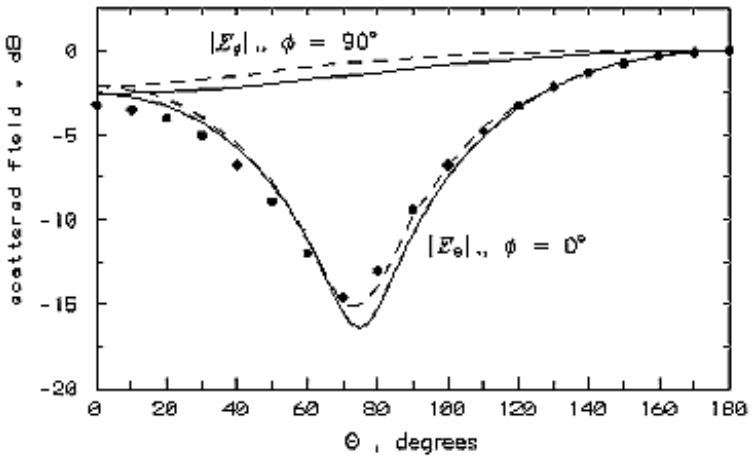

Figure 6. Normalized scattered far-field, 20 log jE=E max j, for a homogeneous imperfectly conducting cube in Fig.5 ($\varepsilon_{er} = 1 - j1000$, $\alpha = \lambda_o / 5$, $\boldsymbol{E_i} = 377e^{-j\beta oz}\boldsymbol{i_x}$ V/m), in two characteristic planes.
—— this method, 240 unknowns
– – – method [8], 1536 unknowns
• • • • method [9], about 4600 unknowns

with 12 trilinear hexahedrons, which are mostly of the rectangular shape, as sketched in Figs.7 and 8. As seen, the most attention was payed to modelling the shape of the human head, which has a dominant role in the electromagnetic coupling between the antenna and the body (Fig.8). Each antenna arm was represented as a single wire segment with polynomial approximation of current.

Table 1 shows the impedance of the dipole-antena, Z_a , for different distances, d, between the antenna and the face of the man (x_g = 173.5 cm). We can see that the dipole which is almost resonant if situated in free space, is far from resonance if located close to the head. The antenna resistance is also greatly changed due to the coupling effect of the man. The results obtained by the entire-domain method presented in this paper are compared with those obtained by the subdomain moment-method using short wire segments and small dielectric cubes for geometrical modelling and pulse basis functions for the current/field approximation [13]. Satisfactory agreement of the two sets of results can be observed, having in mind that two different

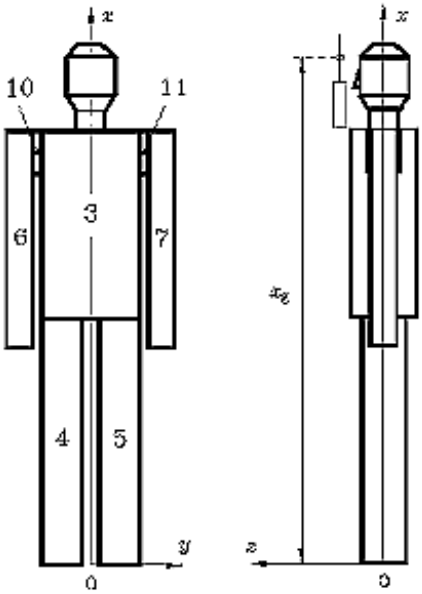

Figure 7. Analysis of the electromagnetic coupling between a dipole antenna and a human body - geometrical model of the structure.

geometrical models of the human body (of the same hight) were used. As additional check, the isolated-antenna impedance was calculated also by the program `WireZeus' [19], and practicaly identical result was obtained as in the case of the application of the novel, entire-domain method.

In summary, the entire-domain solution of the wire antenna --- human body structure was obtained with 14 geometrical elements, 231 unknowns, and 160 CPU-seconds on PC-486/66 MHz (8 MB RAM), without using symmetry. On the other

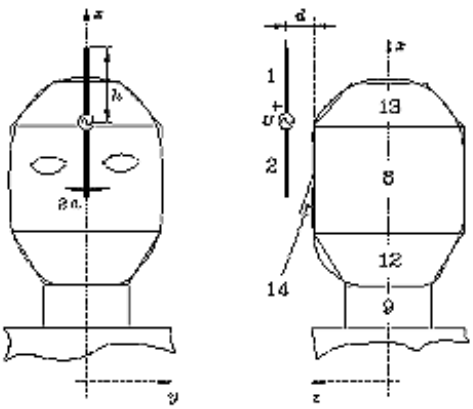

Figure 8. Enlarged detail of the antenna/body structure in Fig.7. (The radio box is not modelled)

hand, the reference subdomain solution with half-body symmetry required a total of 1750 elements, about 5000 unknowns, and about 8 hours of CPU time on PC-486/50 MHz (64 MB RAM), or approximately 30 minutes with CRAY-2 (128 MW main

memory) [13]. Evidently, the computer requirements are greatly in favour of the entire-domain method.

4. CONCLUSION

In this paper, 3D scatterers made of high-permittivity and/or high-conductivity dielectric are analysed by means of the entire-domain moment-method, based on the Galerkin-type solution of the volume integral equation with the current density vector as the unknown. The dielectric bodies are modelled by large trilinear hexahedrons with 3D polynomial current approximation. The results obtained by the entire-domain method are in very good agreement with those from other sources. However, as demonstrated, the entire-domain approach results in much more efficient analysis when compared with the usual, subdomain approach.

	$d \rightarrow \infty$	$d = 5$ cm	$d = 4$ cm	$d = 3$ cm	$d = 2$ cm	$d = 1$ cm
EDM	$76.0 + j7.7$	$71.6 + j29.6$	$67.3 + j33.4$	$58.6 + j35.3$	$49.5 + j25.1$	$51.9 + j34.3$
Ref.13	$75 + j1.3$	$64 + j27$	$60 + j28$	$62 + j35$	$52 + j17$	$60 + j23$
WZ	$76.2 + j7.4$					

Table1. Impedance of a dipole antenna near a model of man in Figs.7 and 8, for different distances d, obtained by the novel entire-domain method (EDM) and the subdomain method [13]. The result for the impedance of the isolated antenna calculated by the program `WireZeus' [19] (WZ) is also presented

REFERENCES

[1] Livessay, D. E, and Chen K. M, "Electromagnetic fields induced inside arbitrarily shaped biological bodies", IEEE Trans., December 1974, MTT-22, pp.1273-1280

[2] Webb, J. P., Maile G. L., and Ferari, R. L., "Finite-element solution of three-dimensional electromagnetic problems", IEE Proc. H, March 1983, 130, (2), pp. 153-159

[3] Schaubert, D. H., Wilton, D. R., and Glisson, A. W, "A tetrahedral modeling method for electromagnetic scattering by arbitrarily shaped inhomogeneous dielectric bodies", IEEE Trans., January 1984, AP-32, (1), pp.77-87

[4] Umashankar K., Taflove A., and Rao, S. M., "Electromagnetic scattering by arbitrary shaped three-dimensional homogeneous lossy dielectric objects", IEEE Trans., June 1986, AP-34, (6), pp.758-766

[5] Tsai, C. T., Massoudi H., Durney, C. H., and Iskander, M. F., "A procedure for calculating fields inside arbitrarily shaped, inhomogeneous dielectric bodies using linear basis functions with the moment method", IEEE Trans., November 1986, MTT-34, (11), pp.1131-1139

[6] Su, C. C., "Electromagnetic scattering by a dielectric body with arbitrary inhomogeneity and anisotropy", IEEE Trans., March 1989, AP-37, (3), pp.384-389

[7] Su, C. C., "The 3-D algorithm of solving the EFIE using face-centered node points, CGM and FFT", Proc. 6th ICAP, York, April 1989, (IEE Conf.Publ. No.301), pp.489-491

[8] Sarkar, T. K., Arvar E., and Ponnapali, S., "Electromagnetic scattering from dielectric bodies", IEEE Trans., May 1989, AP-37, (5), pp.673-676

[9] Rubin, B. J., and Daijavad S., "Radiation and scattering from structures involving finite-size dielectric regions", IEEE Trans., November 1990, AP-38, (11), pp.1863-1873

[10] Zwamborn A. P. M., "Scattering by objects with electric contrast", Ph.D dissertation, Delft University Press, ISBN 90-6275-691-3/CIP, Delft, 1991

[11] Zwamborn, P., and Van Den Berg, P. M., "The three-dimensional weak form of the conjugate gradient FFT method for solving scattering problems", IEEE Trans., September 1992, MTT-40, (9), pp.1757-1766

[12] Popovic, B. D., and Notaros, B. M., "PPP method for analysis of electromagnetic fields in inhomogeneous media", IEE Proc. H, February 1993, 140, (1), pp.36-42

[13] Chuang, H. R., "Human operator coupling effects on radiation characteristics of a portable communication dipole antenna", IEEE Trans., April 1994, AP-42, (4), pp.556-560

[14] Notaros, B. M., "Numerical analysis of dielectric bodies of arbitrary shape and inhomogeneity in the electromagnetic filed", (in Serbian), D.Sc.thesis, Department of Electrical Engineering, University of Belgrade, 1995

[15] Notaros, B. M., and Popovic, B.D., "Electromagnetic scattering by arbitrary dielectric bodies", Proc. Trans Black Sea Region Symposium on Applied Electromagnetism, Metsovo, Epirus, Greece, 17-19 April 1996, pp.FSTE-6

[16] Notaros, B. M., and Popovic , B. D., "General entire-domain method for analysis of dielectric scatterers", IEEE Proc.-Microw. Antennas Propag., December 1996, 143, (6), pp.498-504

[17] Su, C. C., "Calculation of electromagnetic scattering from a dielectric cylinder using the conjugate gradient method and FFT", IEEE Trans., December 1987, AP-35, (12), pp.1418-1425

[18]. Harrington R. F., "Field computation by moment methods", (Macmillan, New York, 1968)

[19] Popovic, B. D., "CAD of wire antennas and related radiating structures", (Research Studies Press, John Wiley & Sons, Chichester, New York, 1991)