APPLICATION OF PULSED GAAS DIODE LASER TO HIGH RESOLUTION MOLECULAR SPECTROSCOPY AND ATMOSPHERIC MONITORING

S.Penchev, V.Naboko, V.Pencheva, S.Naboko

The Institute of Electronics, BAS,
Blvd. Tzarigradsko Shosse 72, Sofia 1784, Bulgaria
e-mail: Penchev@phys.acad.bg

Abstract

New aspects of application of pulsed GaAs diode lasers are discussed, concerning high - resolution molecular spectroscopy in the near infrared spectrum and atmospheric monitoring. Utilising optimal photodetection technique, an absorption spectrum of 8990-9012 Å wavelength, assigned as third oscillatory molecular overtone (3,0,0) of water vapour, was investigated. The measured relative frequency difference, coefficients of absorption and linestrengths of Doppler- and collision- broadened spectral lines are presented with relevance to the theoretical spectrum. Monitoring of atmospheric humidity, based on the relevant diode laser and a method employing linestrength data in the relevant spectral range to open-path measurements, reveals the potential for complex atmospheric studies.

1. INTRODUCTION

Diode lasers (DL) of the near infrared spectral range gain application to high-resolution molecular spectroscopy and ecological monitoring [1-3]. These lasers, primarily employed for communications, possess certain advantages weighing against the lower- intensity absorption when tuned to overtone molecular excitations. They can operate at room temperature and are more convenient than the cryogenically- cooled spectroscopic middle- infrared DL. As a general rule, the individual properties of a DL determine the task of spectroscopic application. A certain type– pulsed GaAs DL, which yields higher power of radiation set by the higher threshold of injection current, is feasible for atmospheric remote- sensing applications considered here. With their frequency of radiation tuned in a range of 10cm^{-1} during the laser pulse, these DL match large number of lines of the rotational- vibrational spectrum of water molecule. The particular selection of DL in this experiment was made, considering modulation, as well as, coherence properties of pulsed laser radiation. We have operated GaAs DL of a special series of one-side heterostructures, emitting 0,5W of laser power in the 0.9μm spectral band, at threshold pulsed current of 4 A. The spectral width of the laser line was measured less than 10^{-3}cm^{-1} by a precise fibre-optics Michaelson's interferometer described in ref. [4]. In a further consideration, this type of lasers is essential for

development of coherent optics, including atmospheric Doppler and DIAL (Differential Absorption Lidar) remote sensing.

2. MOLECULAR SPECTROSCOPY UTILISING COHERENT GaAs DL

The experimental set-up (Fig1) included the following elements: diode laser (**DL**); DL driver (**D**), containing a pulse-generator and a power- amplifier; temperature stabiliser DTC2 Oxford Inst. (**T**); boxcar Avarager-120 Princeton App. Res. (**B**). The primarily employed x-y recording device was replaced with ADC/ PC, allowing additional signal processing and optimal noise attenuation. The temperature of DL radiator was stabilised with 0.01 C^0, when DL radiation was tuned by 20 Å in the range of $15C^0$ - $30C^0$. Water vapour absorption was detected in a standard scheme based on a multiple-pass vacuum cell Perkin Elmer of maximal path length of 20m(**C**).

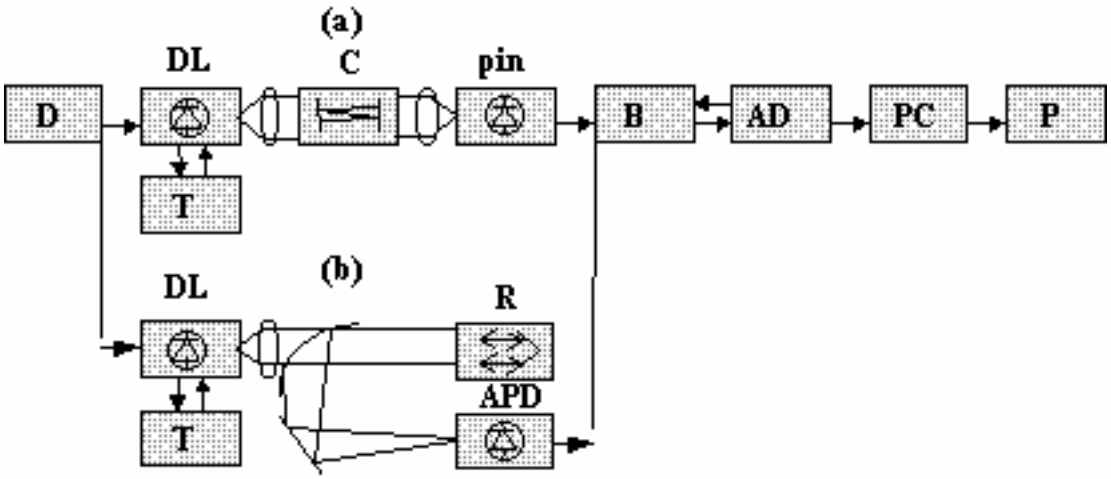

Figure 1. Experimental setup: (a) high-resolution spectroscopy of water vapour; (b) open-path measurements of atmospheric humidity.

The rate of frequency modulation of laser radiation was comparatively high- 1.5×10^5 cm^{-1}/s, dependent on the injection current. Accordingly, the photo-detector was developed on low-noise-high-speed pin/avalanche-photodiodes and an integral video-amplifier in both experiments, to match the wide frequency band and low intensity of the observed signal. The pumping laser pulse performed simultaneously fine-tuning of DL radiation, as a result of the adiabatic heating of the active medium. A monochromator and high- finesse Fabry-Perrot interferometer of 0.17 cm-1 free dispersion (Fig.2) were employed for calibration of the non-linear frequency-modulated time span of the laser pulse.

In this experiment, 7 water vapour absorption lines were detected in the

investigated spectral region of 8990-9012 Å. A comparison with the evaluated spectrum [5], and the solar spectrum of the atmosphere [6], enabled cross- reference identification of the observed absorption lines, assigned as third oscillatory molecular overtone (3,0,0), (Fig.2).

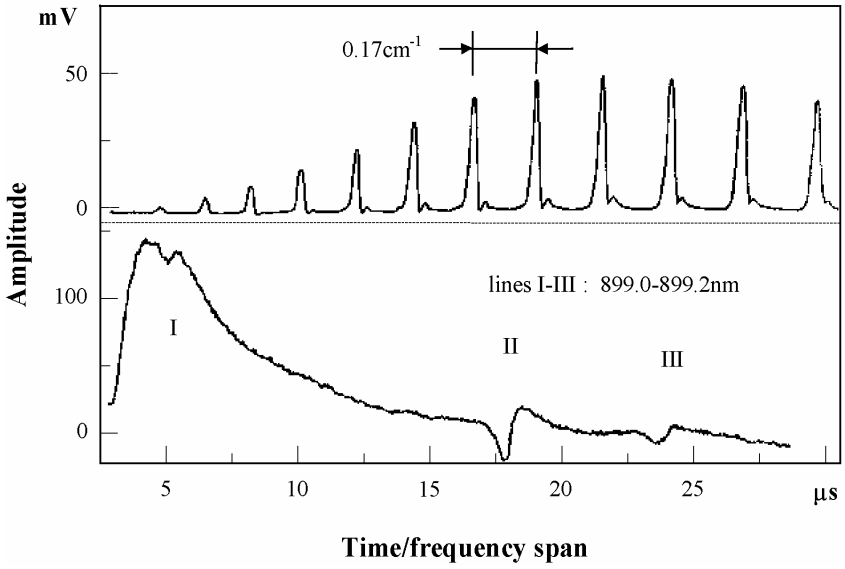

Figure 2. Raw spectra of GaAs DL radiation in 899 nm band: (a) Fabry-Perrot interference pattern of free dispersion of 0.17 cm-1; (b) partly differentiated resonance absorption lines of saturated water vapour.

We have selectively excluded false absorption lines in the list, which were due to the complex profile of DL radiation line. It was modulated by typical relaxation-fluctuations in the semiconductor zone structure [7-8]. The way to avoid mistakes was by varying the injection current in the range of single-mode generation, which affected the position of these lateral satellites, unlike resonance absorption.

Table 1. Water vapour resonance absorption, data on relative frequency and linestrength presented according to two dimensions of concentration: [g/m^3];[1/m^3].

N	Evaluated [cm^{-1}]	Exp.[cm^{-1}]	Linestrength [cm]	(S) [cm/g]

		I (8990-8992 A^0)		
1	11119.41	$\nu_1 - \nu_3 = 1.08$	$7.5*10^{-24}$	0.25
2	11119.1	$\nu_2 - \nu_3 = 0.75$	$0.7*10^{-24}$	0.02
3	11118.32	-	$1.1*10^{-23}$	0.37
4	11117.93	$\nu_4 - \nu_3 = 0.27$	$1.8*10^{-24}$	0.06
5	11117.91	$\nu_5 - \nu_3 = 0.35$	$4.0*10^{-24}$	0.14
		II (9012 A^0)		
6	11093.55	$\nu_6 - \nu_7 = 0.14$	$7.3*10^{-24}$	0.24
7	11093.41	-	$1.0*10^{-23}$	0.35

where, the values $\nu_x - \nu_1$ stand for the measured relative frequency difference between lines, compared to the strongest lines in the list (3;7), and S is linestrength evaluated with 8% error at temperature of the saturated water vapour of $16C^0$.

With relevance to theory, missing lines in the experimental spectrum were due to the characteristic mode- hopping of DL radiation. The rest of the observed lines corresponded

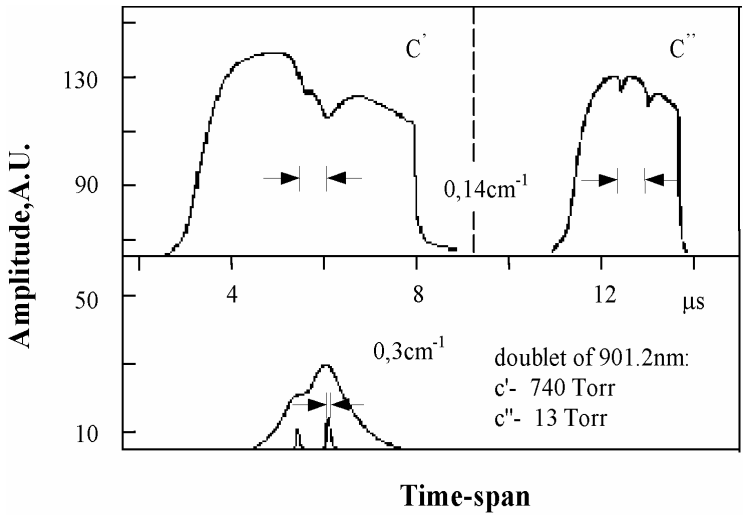

Figure 3. Resonance absorption of GaAs DL radiation in 901nm band: (a) signal from open path of 70m and a retroreflector; (b) related spectrum of saturated water vapour in a low-pressure cell of 1m.

to the solar spectrum. Exposed to atmospheric pressure, water vapour absorption lines Doppler width of 3×10^{-2} cm^{-1} was broadened by five times (Fig.3). Additionally, lines 2 and 4 were observed as a sequence of our higher resolution of overlapping neighbouring lines.

2. ATMOSPHERIC HUMIDITY MONITORED BY DL HYGROMETER

The spectroscopic result is in good agreement with the experiment based on comparison of line-strengths of water vapour and the integral absorption in open-path measurements of atmospheric humidity. The presented method is induced by the

inapplicability of measurements "in situ" for low intensity resonance absorption. It possesses particular advantages, being invariant to collision- broadening of the absorption lines. Thus, except water vapour, a similar method is feasible for e.g. aggressive and unstable gases.

The mathematical consideration is based on the general expression of Beer-Lambert law:

$$dI(\nu) = -N\sigma(\nu)I(\nu)dl\,, \tag{1}$$

where, $I(\nu)$ is the intensity of the laser beam after passing through a path length dl; $\sigma(\nu)$ is the optical absorption coefficient and, N is the concentration of gas molecules,

Integrating in the limits of a resonance line, we get for the concentration of a certain gas:

$$N = \frac{1}{Sl}\int_{\Delta\nu} \ln\frac{I(\nu)}{I_0(\nu)}d\nu\,, \tag{2}$$

where $S = \int_{\Delta\nu}\sigma(\nu)d\nu$ is linestrength.

For weak absorption lines as is the current case- $\left(I(\nu)/I_0(\nu) \approx 1 \right)$, the logarithm could be replaced with the difference in its Taylor sequence, resulting in the final simplified expression of the integral absorption:

$$N = \frac{1}{Sl}\int_{\Delta\nu}\left(\ln\frac{I(\nu)}{I_0(\nu)}\right)'_{I-I_0}\left[I_0(\nu)-I(\nu)\right]d\nu = \frac{1}{Sl}\int_{\Delta\nu}\frac{I_0(\nu)-I(\nu)}{I_0(\nu)}d\nu \tag{3}$$

Dependant on the path-distance, the sensitivity of DL hygrometer is estimated 2ppm (3.10^{-3} g/m^3) (e.g. compared to [3]).

In this particular selection of experimental data, the temperature and the relative humidity were changing inversely proportional until the development of an atmospheric front of higher temperature and humidity (in the hours of the night between 11:30 p.m. and 1:00 a.m.), depicted on Fig.5. The humidity was registered by three hygrometers: a DL hygrometer; a psychrometer and a deformational hygrometer

used as a reference.

Figure 4. Graphs of atmospheric humidity (%) versus atmospheric temperature, measured by GaAs DL and reference hygrometers.

The relative change of humidity in the conditions of the experiment was monitored

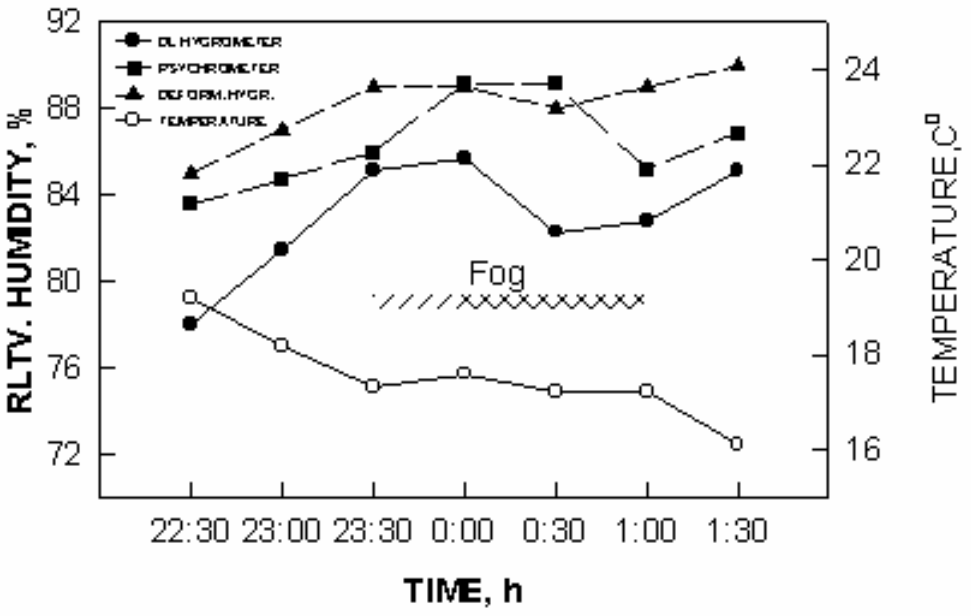

with accuracy- ≅ 1%. The change of linestrength with temperature (16-24 C^0) was negligible and lied within the range of sensitivity of the hygrometer.

The readings of the psychrometer and the deformational hygrometer tend to be higher than that of DL hygrometer. This fact is attributed to the presence of aerosol (visually traced by the formation of fog), detected as incorrect values of humidity with the exception of DL hygrometer. On the second graph (Table2, Fig.2), the atmospheric front is marked by the rapid deviation of the derivative of humidity as a function of temperature gradients per 30 min. It could be observed, the period and rate of a complete atmospheric cycle, tracing the development of the atmospheric front and returning back to the initial state.

Table 2. Stages in the development of an atmospheric front, monitored by DL hygrometer

23:30-0:00 h	atmospheric front

0:00-0:30 h	saturated humidity- fog (change of the slope)
0:30-1:00 h	rear end of the front
0:30-1:00 h	returning to the initial state

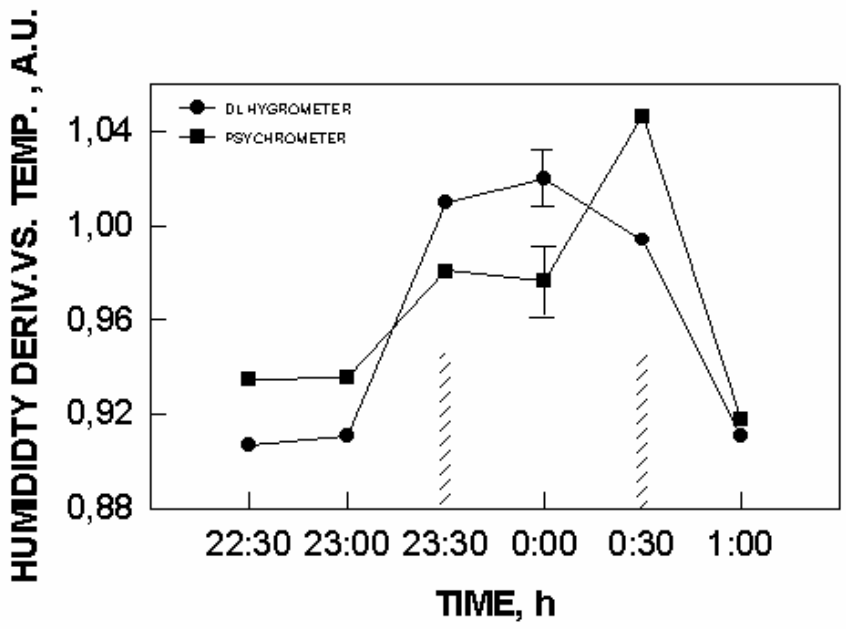

Figure 5. First Derivative of atmospheric humidity as a function of temperature, for DL hygrometer and a psychrometer.

Tested in backing experiments, including CO_2 DIAL on a horizontal path, DL hygrometer was systematically efficient and reliable. The described meteorological process is demonstrative of its potential for comprehensive atmospheric studies.

4. CONCLUSION

In conclusion, a pulsed GaAs DL has been employed to investigation of ro-vibrational excitations of water molecule and determination of atmospheric humidity. Combining high power and high coherence properties of radiation, these types of pulsed DL suggest prospective application to complex atmospheric monitoring. In a general view, the presented method of spectral investigation and determination of gas concentration in the near infrared range is applicable to other gases employing DL of different wavelengths and chemical composition.

This work was funded by Bulgarian National Science Fund, Research Project TK 1-3, which continued support is gratefully acknowledged.

REFERENCES

[1] M.G. Allen, K.L. Carleton, S.J.Davis, W.J. Kessler, C.E. Otis, D.A. Palombo, D.M. Sonnenfroh. “Ultrasensitive dual-beam absorption and gain spectroscopy: applications for near- infrared and visible diode laser sensors”, Applied Optics 34, 18, 3240 (1995).

[2] H .Riris, C.B. Carlisle, L.W. Carr, D.E. Cooper, R.U. Martinelli, R.J. Menna. “Design of an open-path near- infrared diode laser sensor: application to oxygen, water and carbon dioxide vapour detection”, Applied Optics 33, 30, 7059 (1994).

[3] J.A. Silver, Hovde C.D. ”Near-infrared diode laser airborne hygrometer”, Rev.Sci. Instrum. 65, 5, 1691,(1994).

[4] M.I. Belovolov, A.N. Gurjanov, D.D. Gussovsky, E.M. Dianov, A.V. Kuznetsov, V.H.Pencheva, A.M. Prokhorov. “Investigation of Single- Frequency Semiconductor Lasers with a Fiber Michaelson Interferometer”, Sov.J. Quant. Elec. 17., 4, 549 (1987).

[5] R.A. McClatchey, W.S. Benedict, S.A. Clough et al, AFCRL-TR-73-0096, 434,80 (1973).

[6] J.W. Swenson, W.S. Benedict, I. Delbaulle, G. Roland, Memoires de la Societe Royale des Sciences de Liege,5 (1970).

[7] B. Daino, P. Spano, M. Tamburrini, S. Piazzolla. “Phase Noise and Spectral Line Shape in Semiconductor Lasers”, IEEE, J.Quant.Electr. 19,266 (1983).

[8] K. Vahala and A. Yariv. “Semiclassical Theory of Noise in Semiconductor Lasers-part I, II,” IEEE J. Quantum Electron. 19,1096 (1983).