MODELING THE PROCESS OF 2-D ISAR IMAGE RECONSRUCTION BY APPLYING STRAIGHT CONVOLUTION

A.D. Lazarov
Military University of Artillery and Air - Difence
1 Karel Shkorpil str. Shoumen 9700 - Bulgaria
e-mail: lazarov@mu.shoumen.bg

Abstract

One of the most utilised image reconstruction correlational methods in a synthetic aperture radar (SAR) is straight convolution. It is an interesting research problem of applying straight convolution procedure for image reconstruction in an inverse synthetic aperture radar (ISAR). The paper offers solving the ISAR image reconstruction problem by developing signal modelig and straight convolution image retrieving. The discrete mathematical model of a trajectory ISAR signal, reflected by 2-D object is devised. The reference function of the straight convolution procedure is constructed. The expressions determining the range resolution cells transition of the ISAR data and reference function are derived. The validity of the mathematical models and the reference function as well as the image reconstruction straight convolution process is proved by the accomplishment of a numerical experiment.

1. INTRODUCTION

The inverse aperture synthesis is a process of registrating of a complex reflective scattering diagram (complex microwave hologram) of an object as a reflected by the moving target signal. The spatial distribution of the reflectivity function of the object, referred to as the image of the target, can be retrieved from the received complex signals. An ISAR image is mapped onto a range and cross-range plane. The range resolution of an ISAR image is determined by the bandwidth of the transmitted ISAR pulse and the cross-range resolution depends on the inverse synthetic aperture length. To achieve high cross-range resolution a large inverse synthetic aperture is required. A common approach to realize cross-range resolution and to retrieve an ISAR image, i.e., to obtain the spatial distribution of reflectivity function of the target, is Fourier transform [1,2,3]. In order to use the Fourier transform properly, some restrictions must be applied. During the imaging time, the scatterers must remain in their range cells or else their Doppler frequency shifts will be time-varying, the image determining Doppler spectrum obtained from Fourier transform will be smeared, and the ISAR image will be blurred. To realize a focused Fourier ISAR image, motion compensation algorithms must be exploited. If the target is moving smoothly, the standard motion compensation is good enough to generate a clear image of the target by using the Fourier transform. When the target exhibits complex motion, such as rotation and maneuvering, the standard motion compensation is not sufficient

to generate an acceptable image for viewing and analysis. In this case, more sophisticated motion compensation procedures for individual scatterers, such as polar reformatting, are needed [2,4,5]. To perform the polar reformatting, some initial kinematic parameters of the target are required. The restriction required by the Fourier transform can be lifted if the joint time-frequency technique is used to retrieve ISAR image information [6,7].

The straight convolution is one of the correlation-spectral methods for solving the straight problem of the geometric image reconstruction of an object in inverse aperture synthesis [8,10,11]. The utilizing of straight convolution procedure requires structuring reference complex functions, complex-conjugated to the signal, reflected by a point scatterer having the same kinematic characteristics as the observed object.

The straight convolution is a well-known tool for image restoration in SAR systems. This procedure is employed for SAR signal processing in each range resolution cell [9]. For SAR data processing in range resolution cells of the object space the same reference function is utilized, without taking into account the fact that the trajectory SAR signal passes through several range resolution cells during aperture synthesis. In this case the straight convolution procedure generates phase errors and leads to image blurring. Therefore to obtain a focus high resolution object image by applying straight convulution algorithm the reference function must evaluate the transition of the trajectory signal trough range resolution cells during inverse aperture synthesis.

The aim of this work is to derive reference complex functions describing range resolution transition of the trajectory signals during inverse aperture synthesis and to model the straight convolution process of 2-D ISAR image reconstruction. This purpose is achieved by developing discrete mathematical models of trajectory ISAR signals and designing an algorithm, describing both ISAR signal modeling process and ISAR image reconstruction straight convolution procedure.

2. MODELING 2-D ISAR TRAJECTORY SIGNAL

A. ISAR GEOMETRY

Contemporary aircrafts are characterized with high speed parameters. Therefore, during the inverse synthetic aperture time interval, the trajectory of the target can be approximated with

straight line. It is assumed that a target with complicated geometry is moving with a rectilinear trajectory at a constant velocity $\vec{V}$ in 2-D Cartesian coordinate space xOy (Fig.1).

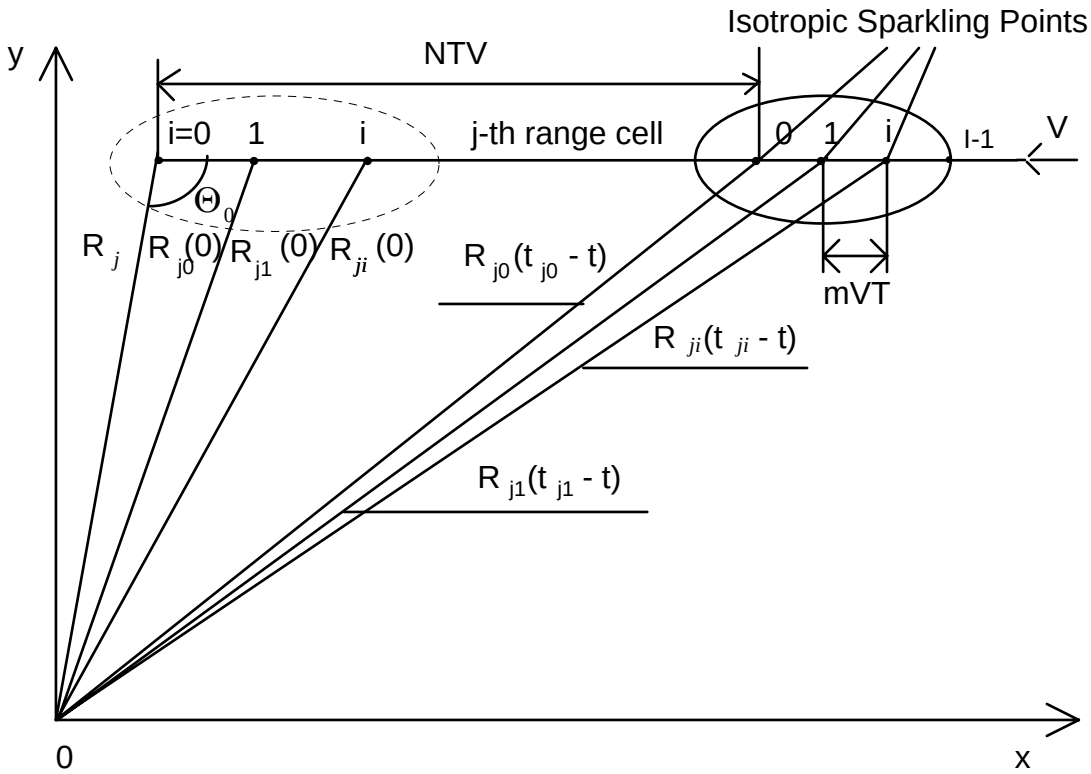

Figure 1. ISAR geometry.

The target is described by a set of adjacent point scatterers. The distance between them and an object's geometric center remains constant during aperture synthesis. This is illustrated in figure 1, where R_j is the distance from ISAR to the j-th range, and a function $R_{ji}(p)$ models the distance variation to the i -th bright point of the j-th range during the object's movement. The nominal relative distance, m, between the sparkling points is given in terms of the number of pulse periods between these sparkling points as the object moves with constant velocity, $\vec{V}$. Over the course of N pulse periods, the target moves a distance NTV at the j-th range.

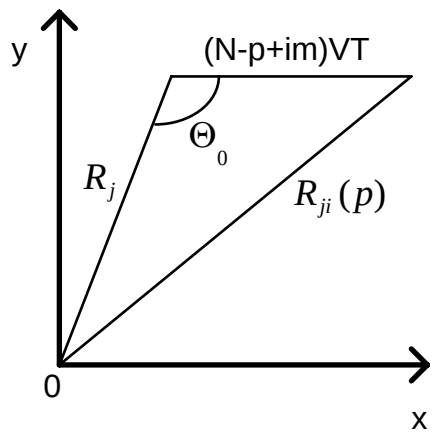

Figure 2. Computing the range distance to the point scatterer of the object during inverse aperture synthesis

Fig. 2 illustrates that the distance from the origin of the Cartesian coordinate, where the ISAR is placed, to any sparkling point can be calculated from the j-th range R_j, the number of pulses m, the particular pulse number p, the point number i , the distance between points m, the target velocity $\vec{V}$, the pulse period T and the angle of the trajectory Θ_0. Given these values:

$$R_{ji}(p) = \sqrt{R_j^{\,2} + V^2T^2(N - p + im)^2 - 2R_jVT(N - p + im)\cos\Theta_0} \tag{1}$$

B. ISAR TRAJECTORY SIGNAL MODEL

The ISAR transmitter radiates a sequence of electromagnetic waves to a target, that are described analytically by succession of N emitted pulses as follows

$$S(p) = \sum_{p=0}^{N-1} a(t - pT)\exp\left\{-j\left[\omega(t - pT) + \varphi_0\right]\right\} \tag{2}$$

where $a(t - pT)$ is the amplitude of the emitted pulses, $\omega = 2\pi\dfrac{c}{\lambda}$ is the signal angular frequency, p is the pulse number, T is the time repetition period, φ_0 is the initial phase of pulse; λ is the wavelength of the pulse; $c = 3.10^8\, m/s$ is the speed of light.

The model of a complex amplitude of a determinated reflected signal from the j-th range cell, registrated in the quadrature phase detector output, is given as a sum of the signals reflected by I sparkling points, placed on the j-th range cell, by the expression

$$S_j(p) = \sum_{i=0}^{I-1} S_{ji}(p) = \sum_{i=0}^{I-1} a_{ji} \exp\left[j \frac{4\pi}{\lambda} R_{ji}(p) \right] \tag{3}$$

where $S_{ji}(p)$ is the complex amplitude of a determinated signal reflected from i-th point scatterer, placed on the j-th range cell; a_{ji} is the reflection coefficient or the intensity of the ji-th scatterer of the object, which in common case is a random function.

The quadrature components of the complex amplitude of a determinated reflected signal can be written as

$$\begin{aligned} S_{jC}(p) &= \mathrm{Re}[\dot{S}_j(p)] = \sum_{i=0}^{I-1} a_{ji} \cos\left[\frac{4\pi}{\lambda} R_{ji}(p) \right]; \\ S_{jS}(p) &= \mathrm{Im}[\dot{S}_j(p)] = \sum_{i=0}^{I-1} a_{ji} \sin\left[\frac{4\pi}{\lambda} R_{ji}(p) \right]. \end{aligned} \tag{4}$$

The sums (3) and (4) are correct if the distance $R_{ji}(p)$ satisfies the constrain $\mathrm{mod}\left[R_{ji}(p) - R_s \right] < \frac{\Delta R}{2}$, where ΔR is the dimension of the range resolution cell, and R_s is the distance to the s-th range resolution cell. In common case the j-th range cell passes through several spherical segments, that determine range resolution cells in the object space. Each of these segments has dimension ΔR. Accordingly the sums (3) and (4) can be written in the limits of the each spherical segment, i.e. range resolution cell. The number of a spherical segment (range resolution cell), where ji-th point scatterer is placed at the p-th time instant, is given by

$$s_{ji}(p) = \mathrm{int}\left[\frac{\mathrm{mod}[R_{ji}(p)] - R_{\min}}{\Delta R} \right] + 1; \; p = \overline{0, N-1} \tag{5}$$

where $R_{\min}$ is the conventional least distance to the object space.

The real complex signal reflected by the target includes zero-mean delta correlated Gausian noise $\dot{n}(p)$, i.e.

$$\dot{\xi}_j(p) = \sum_{i=0}^{I-1} a_{ji} \exp\left[j\frac{4\pi}{\lambda} R_{ji}(p) \right] + \dot{n}(p) = \xi_{jC}(p) + j\xi_{jS}(p) \tag{6}$$

The quadrature components of the real target complex signal are expressed in the form:

$$\begin{aligned} \xi_{jC}(p) &= \sum_{i=0}^{I-1} a_{ji} \cos\left[\frac{4\pi}{\lambda} R_{ji}(p) \right] + n_C(p); \\ \xi_{jS}(p) &= \sum_{i=0}^{I-1} a_{ji} \sin\left[\frac{4\pi}{\lambda} R_{ji}(p) \right] + n_S(p), \end{aligned} \tag{7}$$

where $n_C(p)$ and $n_S(p)$ are the quadrature components of the Gausian noise with zero mean values and delta covariances.

The expressions (7) can be employed for modeling a determinated component and an additional random part of the complex trajectory real signal.

C. STRUCTURING THE REFERENCE FUNCTION

The reference function is a complex signal, complex-conjugated to ISAR complex trajectory signal reflected from a point scatterer. This point scatterer, called reference point, possesses the same kinematic characteristics as the observed object. The point scaterer with a number $i = 0$ and with a reflection coefficient (intensity) a_{0j} is the reference point from the j-th range cell. The complex reference function and its quadrature components are defined for each j-th range cell of the object space. The complex reference function is described by

$$\dot{S}_{j0}(p) = a_{j0} \exp\left[-j\frac{4\pi}{\lambda} R_{j0}(p) \right] \tag{8}$$

where

$$R_{j0}(p) = \sqrt{R_j^{\,2} + V^2T^2(N-p)^2 - 2R_jVT(N-p)\cos\Theta_0} \tag{9}$$

is the distance to the reference point moving in the j-th range cell.

The quadrature components of the complex reference function can be written in the forms as follows

$$S_{Cj0}(p) = \mathrm{Re}[\dot{S}_{j0}(p)] = a_{j0}\cos\left[\frac{4\pi}{\lambda}R_{j0}(p)\right] = a_{j0}\cos\varphi_{j0}(p);$$
$$S_{Sj0}(p) = \mathrm{Im}[\dot{S}_{j0}(p)] = a_{j0}\sin\left[\frac{4\pi}{\lambda}R_{j0}(p)\right] = a_{j0}\sin\varphi_{j0}(p). \quad (10)$$

3. ISAR IMAGE RECONSTRUCTION ALGORITHM OF STRAIGHT CONVOLUTION

In case the correlation parameter is funded in a reference function, the ISAR image reconstruction procedure of straight convolution is described by the expression

$$I(j,q) = \mathrm{mod}\left[\sum_{p=0}^{N-1}\dot{\xi}_j(p)\exp\left(-\frac{4\pi}{\lambda}R_{j0}(p-q)\right)\right] \quad (11)$$

where $R_{j0}(p-q)$ is the distance to the reference point of j-th range, taking into account a correlation parameter q. The distance $R_{j0}(p-q)$ is defined as

$$R_{j0}(p-q) = \sqrt{R_j^{\,2} + V^2T^2(N-p-q)^2 - 2R_jVT(N-p-q)\cos\Theta_0} \quad (12)$$

The transition of the reference function through range resolution cells during inverse synthetic aperture is described by the following expression

$$s_{j0}(p\pm q) = \mathrm{int}\left[\frac{\mathrm{mod}[R_{j0}(p\pm q)] - R_{\min}}{\Delta R}\right] + 1;\ p = \overline{0, N-1} \quad (13)$$

It should be emphasized that the multiplications in correlation procedure (11) are valid in the limits of the range resolution cell. The parameter $s_{j0}(p\pm q)$ determines the number (address) of range resolution cell. To perform multiplication with reference function values the complex trajectory data must be taken from it.

The image reconstruction procedure (11) derives the bright points' intensities of the object and depicts a slice of the object shape in the j-th range. The algorithm of straight convolution, applied for signal processing in quadrature channels of an ISAR signal processing system, based on expression (11), can be described as follows

$$
\begin{aligned}
I(j,q) = \mathrm{mod}\{ & \sum_{p=0}^{N-1}[\sum_{i=0}^{I-1} a_{ji} \cos\frac{4\pi}{\lambda} R_{ji}(p) + n_c(p)]\cos\frac{4\pi}{\lambda} R_{j0}(p \pm q) + \\
& +[\sum_{i=0}^{I-1} a_{ji} \sin\frac{4\pi}{\lambda} R_{ji}(p) + n_s(p)]\sin\frac{4\pi}{\lambda} R_{j0}(p \pm q) + \\
& + j\sum_{p=0}^{N-1}[\sum_{i=0}^{I-1} a_{ji} \sin\frac{4\pi}{\lambda} R_{ji}(p) + n_s(p)]\cos\frac{4\pi}{\lambda} R_{j0}(p \pm q) - \\
& -[\sum_{i=0}^{I-1} a_{ji} \cos\frac{4\pi}{\lambda} R_{ji}(p) + n_c(p)]\sin\frac{4\pi}{\lambda} R_{j0}(p \pm q)\},
\end{aligned}
\tag{14}
$$

where q accedes values in the interval $q = \overline{-\frac{N}{2}, \frac{N}{2}}$.

The functional scheme of an image reconstruction straight convolution procedure, that can be applied in quadrature channels of a signal processing system, is represented on Fig. 3.

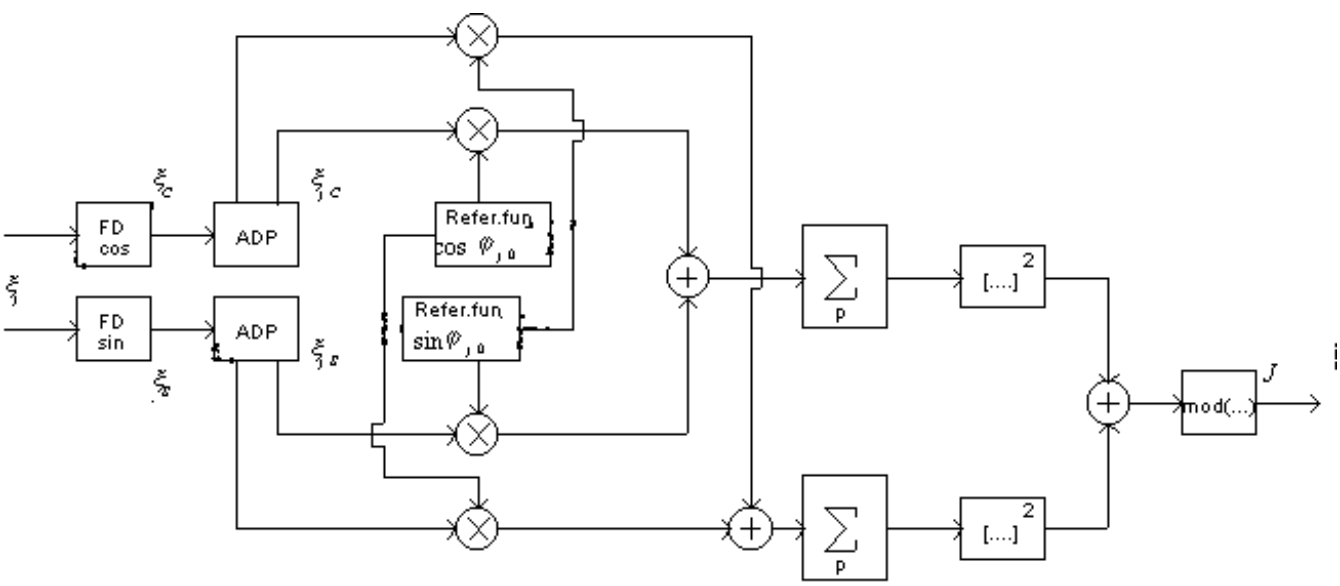

Figure 3. The functional scheme of an image reconstruction straight convolution procedure, exploited in quadrature channels of a signal processing system.

The analytical expression (14) can be employed for modeling ISAR image restoration process, utilizig straight convolution.

4. NUMERICAL EXPERIMENT

A simulation numerical experiment is accomplished. It is assumed that an object with complicated shape flies in ISAR directive diagram zone. The target moves with rectilinear trajectory at a constant velocity V =500 m/s. The trajectory line of the object geometric center intersects the ISAR radar beam axis, making an angle $\Theta_0 = \frac{\pi}{2}$ with it. The object is represented as a set of sparkling points, connected with its surface. Each sparkling point is featured by a reflection coefficient or intensity a_{ji}, which can be constant or variable (random function). During the inverse aperture synthesis the point scatterers of the object remain in the same range cells. In the object space J=17 range cells are defined. The distance $R_{j=0}$ to the $j = 0$ range cell, where the geometric center is moved, is $R_{j=0}$=10000 m. The minimal distance $R_{j=-8}$ to the $j = -8$ range cell of the object space is $R_{j=-8}$=9992 m. The maximum distance $R_{j=8}$ to the $j = 8$ range cell of the object space is $R_{j=8}$=10008 m. The relative distance between the adjacent range cells is Δj=1. The relative azimutal distance between the adjacent point scatterers is m=5. The ISAR transmitter emits pulses with pulse repetition period $T = 10^{-3}$ and with wavelength $\lambda = 3.10^{-2}$ m. The full number of pulses during the inverse aperture synthesis is N=300.

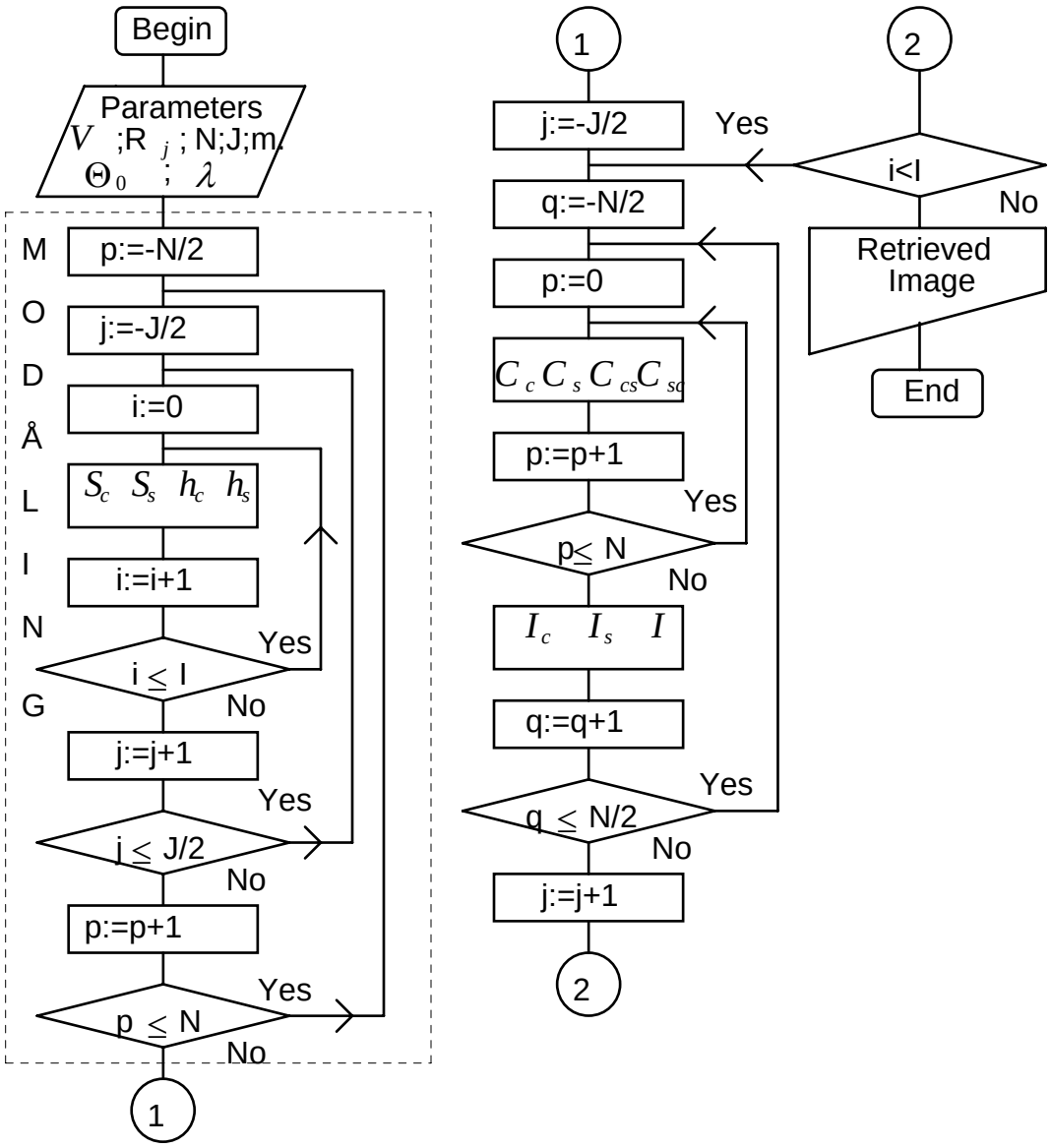

Figure 4. An algorithm for ISAR signal modeling and an image reconstruction by applying straight convolution procedure.

The modeling of complex trajectory signal formation process is realized by utilizing expressions (7). The quadrature components of the additive noise is formed by a standard computational random procedure. The image reconstruction straight convolution procedure is implemented by applying expression (13).

An algorithm for modeling a complex trajectory signal formation process and an image reconstruction process exploiting straight convolution procedure is developed. This algorithm is illustrated on Fig. 4, where the following notations are used:

$$S_C = S_{jC}(p) = \mathrm{Re}\left[\dot{S}(j,p,m,V,T,R_j,\Theta_0), a_{ji} = random\right]$$
$$S_s = S_{js}(p) = \mathrm{Im}\left[\dot{S}(j,p,m,V,T,R_j,\Theta_0), a_{ji} = random\right];$$
$$h_c = S_{Cj0}(p) = \mathrm{Re}\left[\dot{S}_{j0}(p,V,T,R_j,\Theta_0)\right];\ h_s = S_{Sj0}(p) = \mathrm{Im}\left[\dot{S}_{j0}(p,V,T,R_j,\Theta_0)\right];$$
$$C_c = \left[S_c(p) + n_c(p)\right]h_c(p+q);\ C_s = \left[S_s(p) + n_s(p)\right]h_s(p+q);$$
$$C_{sc} = \left[S_s(p) + n_s(p)\right]h_c(p+q);\ C_{cs} = \left[S_c(p) + n_c(p)\right]h_s(p+q);$$
$$I_c = I_c(j,q) = C_c + C_s\ ;\ I_s = I_s(j,q) = C_{sc} + C_{cs}\ ;$$
$$I = I(j,q) = \left[I_c^{\,2}(j,q) + I_s^{\,2}(j,q)\right]^{\frac{1}{2}}$$

The computational results of image reconstruction from ISAR data by applying straight convolution are represented on Fig. 5.

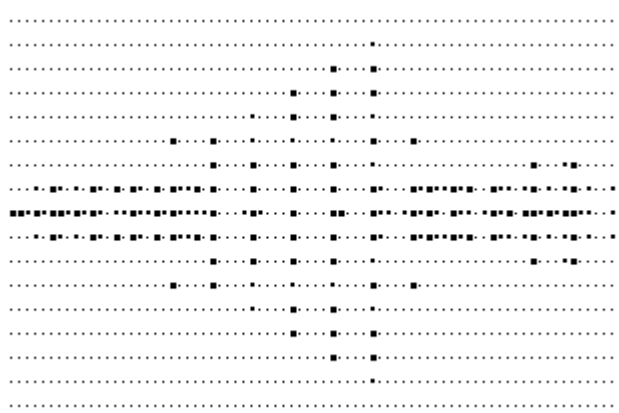

(à)

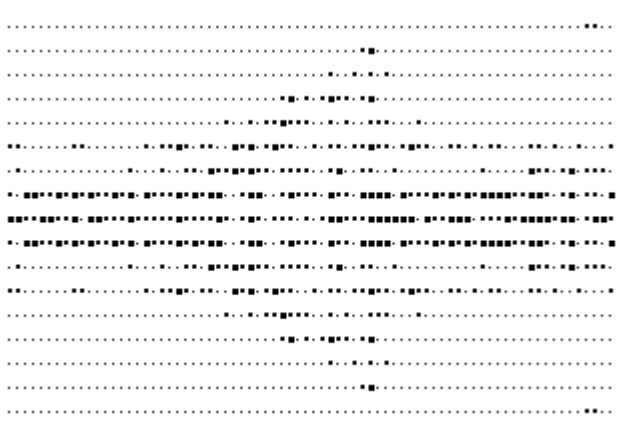

(b)

Figure 5. Aircraft images, obtained by applying straight convolution procedure. (a) with determinated intensities of point scatterers. (b) - with random intensities of point scatterers.

An aircraft image is shown on Fig. 5, a where the intensities of the point scatterers are constant, i.e., $a_{ji} = const$. An aircraft image is shown on Fig. 5, b where the intensities of the point scatterers are variable, i.e., $a_{ji} = random$.

5. CONCLUSIONS

A model of the 2-D image reconstructing straight convolution process from ISAR signal data is presented. A discrete mathematical model of the complex trajectory signal, reflected by 2-D object with complicated shape is devised. The structure of reference function is devised. To evaluate the transition of the trajectory signal and the reference function through range resolution cells during inverse aperture synthesis the expression, determining the number of the range resolution cell, is derived. The validity of the developed mathematical model of the trajectory signal and the image reconstruction straight convolution algorithm is evaluated by accomplishment of a simulative computational experiment. To estimate an incident reflectivity of point scatterers and their nonstationary intensities in the numerical experiment the standard random procedure for modeling variations of the intensities of sparkling points is exploited

The described image reconstruction algorithms can be applied in the research tasks for modelimg complex trajectory signal formation and image retrieving processes in inverse aperture synthesis. The functional scheme of a signal processing system and the derived algorithms can be utilized as a base for developing programme-technical systems for ISAR image reconstruction.

REFERENCES

[1] Chen, C.C., H.C. Andrew. Multifrequency imaging of radar turntable data. IEEE Transactions on Aerospace and electronic sistems, vol. 16, No 1, Jan. 1980, pp. 15-22.

[2] Wehner, D. R.. High resolution radar (2nd ed.) Boston: Artech House, 1994, ch. 6 and 7.

[3] Jain, A., I. Patel. Dinamic imaging and RCS measurements of aircraft. IEEE Transactions on Aerospace and Electronic Systems, vol. 31, No 1, Jan. 1995, pp. 211-226.

[4] Carrara, W.G., R. S. Goodman, R. M. Majewski. Spotlight synthetic aperture radar - signal processing Algorithms. Boston: Artech House, 1995, ch. 4.

[5] Rihaezek, A. W., S. J. Hershkowitz. Radar resolution and complex-image analysis. Boston: Artech Hous, 1996, ch. 6.

[6] Chen, V.C., S. Qian. Joint time-frequency transform for radar range-Doppler imaging, IEEE Transactions on Aerospace and Electronic Systems, vol. 34, No 2, April 1998, pp. 486-499.

[7] Wang, Y., H. Ling, V.C. Chen. ISAR motion compensation via joint time-frequency technique. IEEE Transactions on Aerospace and Electronic Systems, vol. 34, No 2, April 1998, pp. 670-677.

[8] STEINBERG B.D., CARLSON D.L., LEE W., "Experimental localized radar cross sections of aircraft", IEEE, v. 77, No 5, May, 1989.

[9] ELACHI CH.,BICKNELL T.,JORDAN R., WU CHIALIN, Spaceborne synthetic-aperture imaging radars: applications, techniques, and technology, IEEE Trans. 1982, v. 70, pp. 44-89, Oct., No 10.

[10] ELECTRONIC Imaging / Ed. by T. P. McLean, P. Schagen. Academic Press, London, 1979.

[11] INVERSE methods in elktromagnetic imaging / Ed. by W.-M. Boerner e.a.- Dordrecht - Boston, Reidel Publ. Publ. Co., 1985, pt. 1.