H.V.Baghdasaryan, D.M.Meghavoryan

Fiber Optics Communication Laboratory
State Engineering University of Armenia
105, Terian str., Yerevan 375009, Armenia
Phone: +3742 525 726
Fax: +3742 151 068
E-mail: hovik@seua.am

Abstract

By applying of numerical models the performance analysis of frequency encoded fiber optic CDMA techniques for using in LANs is presented. The possibility of using active Bragg gratings chain as a coder and correlator is shown. Newly obtained numerical results are discussed.

1. 1. INTRODUCTION

During the last years an increasing interest in the design and analysis of fiber-optic code division multiple access (FO-CDMA) techniques (also called spread-spectrum techniques) for using in Local Area Networks (LANs) is taking place. These systems have advantages of being simple, requiring inexpensive, integrated with fiber components that is important to achieve all optical signal processing. Besides, the systems with encoding in frequency domain are inherently code synchronous. Coded spectrum are always aligned in the frequency domain of the receiver, even if the information symbols of the users are asynchronous in time. Additionally, multirate transmission can be achieved that is an important condition for future communication networks.

In this paper we present the investigation of spectral encoded CDMA techniques with broadband sources and active fiber Bragg gratings chains. By applying the numerical model for performance analysis we show that choice of code sequence is an important factor for signal to interference ratio (SIR) evaluation.

2. SYSTEM DESCRIPTION

The basic block diagram of the system is shown in fig.1. The conventional CDMA technique is based on coding of each information symbol by pseudorandom code sequence. At the other end signal proceeds through balanced receiver and desired user code sequence is selected by means of correlation process. In our system we consider the coding of broadband source by using of Bragg grating filters chain. The idea of spectral coding has been presented in some recent publications /1,2,3/. However, for using in real communication systems we

need simple, inexpensive solutions with integrated components. Fiber-optic Bragg grating filters are an attractive choice for these purposes /4,5/. Combination of filter and amplifier functions compensates the power losses that will arise during the coding process.

In fig.2 the numerical results for active uniform Bragg gratings with period number M=300 are presented /5/. Calculations are made for modulation amplitude AM=0.01, ε_0`=1 and different ε_0`` (where $\varepsilon_0$` and $\varepsilon_0$`` are real and imagine parts of permittivity respectively, λ_0- electromagnetic wavelength and Λ- permittivity distribution wavelength). It is possible to obtain reflection bandwidth approximately equal to 0.1nm and consequently construct high capacity optical network. It is important to note that correlation can be performed in optical domain by using of the same integrated Bragg filters chain for each users correspondingly.

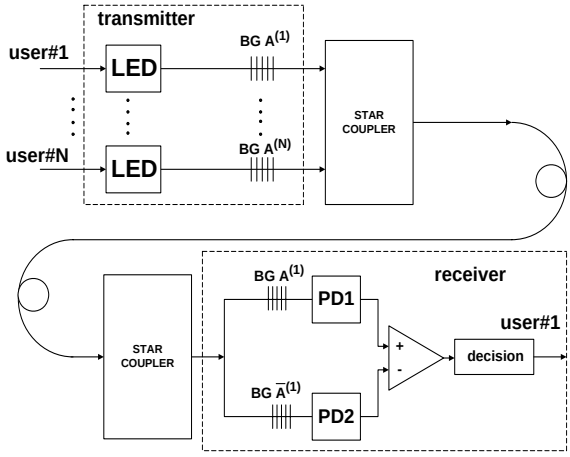

Figure 1. CDMA system block diagram

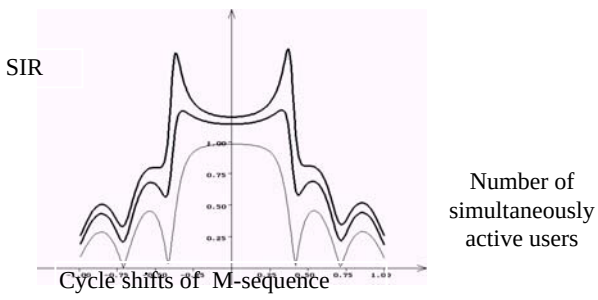

Figure 2: Reflection coefficient of Bragg grating with gain versus the detuning X, where $X = (1/AM)(1 - 2\Lambda\sqrt{\varepsilon_0'/\lambda_0})$

3. RESULTS AND DISCUSSIONS

The performance evaluation is fulfiled for M-sequences and Walsh codes with length of 127 and 128 respectively. The LED spectrum is chosen as a gaussian with coding of half maximum amplitude point bandwidth (FWHM). Calculations are carried out under the assumption that transmission quality depends on the presence of interfering users' signals, i.e. other noise factors are assumed to be negligible.

Fig.3 shows the calculated SIR for cycle shifts of M-sequence versus the active users number. With increasing number of users the SIR degrades. Such degradation is not the same for all users. Some codes show a tolerable transmission quality even in the presence of maximum possible unwanted users' signals. This depends on identical element blocks position inside of code sequence for a given spectral shape.

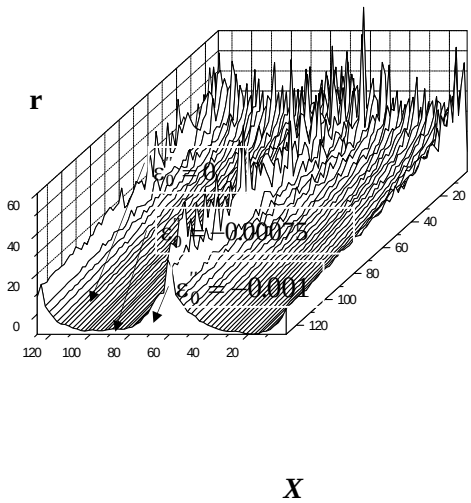

Figure 3. SIR (M-sequences)

Using Walsh codes larger number of active users with tolerable noise floor (fig.4) can be obtained. The “1” and “0” density inside of Hadamard matrix row (or column) is more homogeneous which decrease SIR degradation. However some of the codes with long blocks of “1” and “0” show negative nature of SIR. In the practice they can be excluded from a number of allowed codes, that slightly decrease the possible users number (for length 127 the number of such codes ≈8).

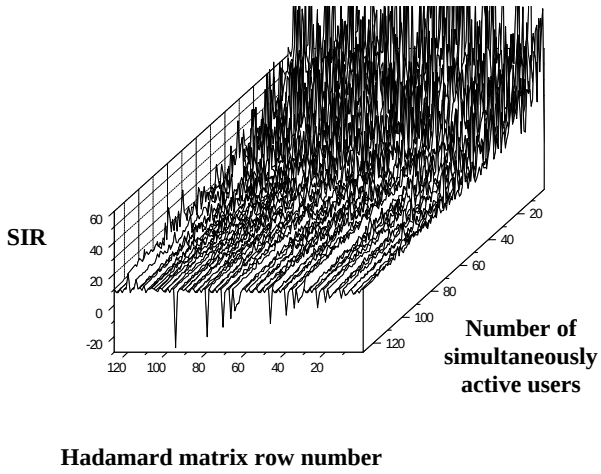

Figure 4. SIR (Walsh codes)

The only factor that can limit implementation of such techniques is their small transmission length. Using of broadband sources leads to worsening of dispersion characteristics that reduce the system bandwidth. In the table 1 we summarized the bandwidth (BW) versus the LED spectral width using the well known differentiated three-term Sellmeier equation. Calculations are made for single mode fiber with dispersion slope 0,092 psec×nm^{-2}×km^{-1} and zero dispersion at wavelength of 1310 nm. Transmission wavelength is equal to 1310 nm. As we see, even in the case of LED spectrum bandwidth 60 nm we have tolerable dispersion level for using in LANs (for bitrate 155 Mbit/s (STM1 format) transmission length ≈20 km).

Table 1: System bandwidth for different LED spectral width

LED spectral width	40 nm	50 nm	60nm
BW [Mhz×km]	9057	5797	4026

4. CONCLUSIONS

In this paper we have presented the detailed analysis of spectral encoded multiple access techniques. For the presented system it was found the SIR dependence from code sequence type. Interfering signals floor limits the users number for M-sequence up to 30-40 for the

investigated codes length. Using Walsh codes the higher number of users can be obtained (60-70 users). The network scale due to the fiber dispersion evaluation is also shown.

2. REFERENCES

[1] A.M.Weiner, J.P.Heritage and E.M.Kirschner, “High-resolution femtosecond pulse shaping”, J.Opt.Soc. Am.B.,vol.5, No.8/August 1988, pp.1563-1572.

[2] M.Kavehrad, D.Zaccarin, “Optical code-division-multiplexed systems based on spectral encoding of noncoherent sources”, Journal of lightwave technology, vol.13, No.3, March 1995, pp.534-545.

[3] L.Nguyen, T.Dennis, “Experimental demonstration of bipolar codes for optical spectral amplitude CDMA communication”, Journal of lightwave technology, vol.15, No.9, September 1997, pp.1647-1653.

[4] Z.Wang, T.Durhuus, B.Mikkelsen, K.E.Stubkjaer, “Distributed feedback laser amplifiers combining the functions of amplifiers and channel filters”, Appl.Phys. Lett., vol.64(16), 18 April 1994, pp.2065-2067.

[5] H.V.Baghdasaryan, G.G.Karapetyan, T.M.Knyazyan, S.I.Avagyan and N.K.Uzunoglu, Computer modelling of a fiber Bragg grating-amplifier. /COST 240 Workshop, SOA-based Components for Optical Networks, Prague, 1997, 18-1 - 18-3.