THE STRUCTURE OF FERROMAGNETIC MATERIALS METALLOGRAPHICAL STUDY

Silvija Letskovska/Rakanova/, Kamen Seymenliyski, Stanislav Simeonov

Bourgas Free University - Department for Informatics, Engineering and Natural Science
Bourgas - 8000, "Aleksandrovska" 101,BULGARIA
silvia@bfu.bg

Abstract

The aim of this paper is to present the method and laboratory equipment forstudying of ferromagnetic materials. The application of this method for development and visualization of magnetic microstructures is shown. The electrical circuitry, the design and application of the apparatus are described. Discussion of experimental results are presented.

1. INTRODUCTION

The method and equipment for metallographic investigation of the ferromagnetics are the aim of this work. This study is based on the colloidal method for developing and observing of the magnetic structures of the these materials. The methodology and the apparatus for this magnetic -metallography research is created as an instrument in the number of scientific investigations. They are connected with the magneto-structural analyzes of steel alloys.

In comparison with other two methods of observation of the magnetic domains/optical metallography and electron beam method/ magneto-structural analyzes(MSA), also known as magneto-colloidal method is easier/1/. The optical metallography requires high level of qualification of the operator, especially in the investigation of the complex doped alloys. The electron microscopy uses complicated and expensive equipment, the preparation of the samples needs special treatment. MSA gives the possibility to observe the structure with usual metallographic microscope in the presence of constant magnetic flied. In the use of MSA for metallographic phase analyzes there is possibility the ferromagnetic phases to be identified. This is an advantage of the MSA method, because, when only the metallographic microscope is used, the quality different phases look identical.

In the MSA, the samples are preliminary mechanically polished, then electrolytic. On the polished surface magneto-colloidal suspension is deposited. When the external magnetic field is applied, the magnetic particles deposit in the magnetic field of dispersion, i.e. in the border between domains. After the stop of the particles movement the characteristic labyrinth configuration is obtained - the characteristic figures are formed(so called figures of Bitter)/2/.

2. EQUIPMENT

To observe the presence of magnetic phases in the samples, the equipment has been built realizing the presence of external magnetic field. The block circuitry of this equipment is shown in the figure 1.

The power supply transformer has next parameters: the primary voltage U1 220 V/50 Hz, the secondary voltage and current U2 - 18 V, I2 - 10 A; the power of the transformer PT - 0,1 kVA. The rectifier block, designed for this application in the magneto-colloidal method, is realized using bridge, mono-phase, double semi-periodical circuit/3/. The stabilization of the output parameters of the regulated rectifier is made using integrated circuit μA723C/4/.

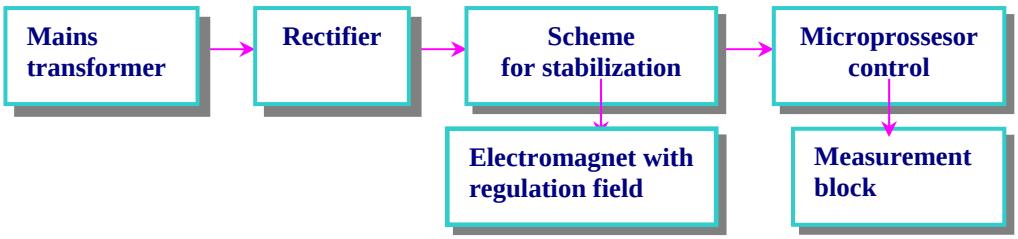

Figure 1. Block circuitry.

The electromagnet, acting as an instrument, the coil is used made by copper wire with rectangular profile- 3 mm 2. The wire is wound on to monolithic spool and it has cylindrical shape with dimensions: external diameter – 210 mm; internal diameter - 100 mm; height - 100 mm; the thickness of the wall - 3 mm; magnetic field strength H=9064 A/m; electromagnetic induction B=0,014 T.

The electromagnet is put on the object table of the microscope in the position in which the axis of the coil to be equal to the axis line of the objective. Thus force lines of the field are perpendicular of the polished surface of the sample and they insured homogeneity of the magnetic field. Onto the polished surface of the sample one-two drops of the colloid are put. After that it is pressed onto the object glass in the way, that between the sample and the glass, thin film colloid to be formed. As prepared sample, with the glass, is put onto the object table of the microscope, in the center of the coil(figure 2).

After switching on of the regulated rectifier a slowly increasing of the voltage the movement of the particle is seen. In the time of stopping of this movement the characteristic configuration of the magnetic areas obtains.

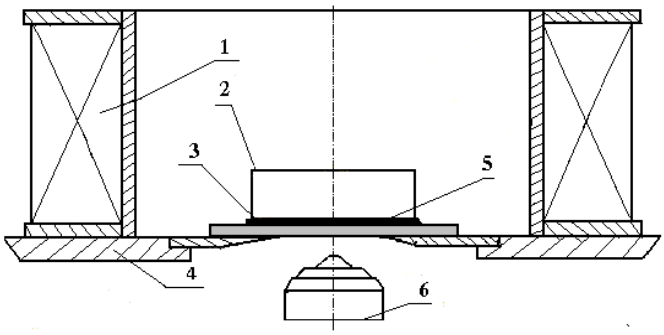

Figure 2. Schematic picture of the apparatus: 1-electromagnit; 2- object; 3-coloid; 4- object table; 5- object glass ; 6- objective.

Using the single-chip microcomputer 80552/5/ the scheme for to command of the regulated rectifier is realized (figure 3). The characteristic of this tape micro-controller, except integrated standard elements(filters, counters, etc) is a presence of built-in DAC and ADC. The integrated in the apparatus part gives the possibility for realization of measuring and regulating functions in the circuit. Using the group of four buttons there is a possibility the voltage to be step regulated. The signal in the output of the built-in in the controller 80552 DAC is time - width coded (TWM).

For this purpose with it is connected integrator with standard operational amplifier. The value of the output voltage, converted, using built-in ADC, is shown on the LC(liquid crystal) display. The software gives the possibility to command the value of the step for changing of the output voltage. The shown scheme gives additional possibilities for program regulation and visualization of the parameters of the system and is under developing.

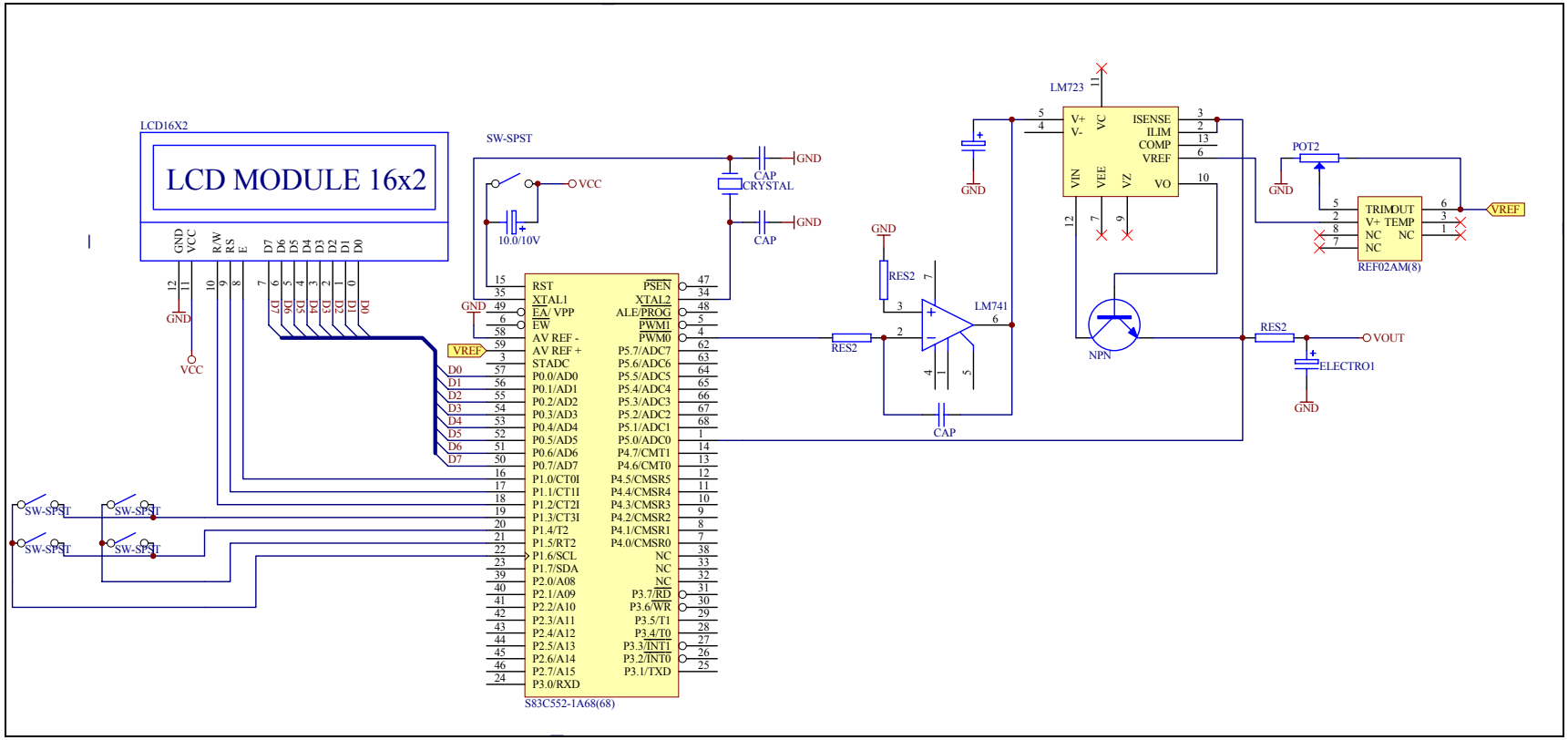

Figure 3. Scheme for command.

3. EXPERIMENTAL RESULTS

With this developed apparatus for magneto-structural analyzes the series of the experiments are provided for observing of the presence of the magnetic phases in the nitrogen containing stainless steels(nitrogen ≈1%). In the figure 4 two of the metallographical photos are presented in which the characteristic pictures of Bitter are visible in the best wag, produced in U=16 V; I=7 A.

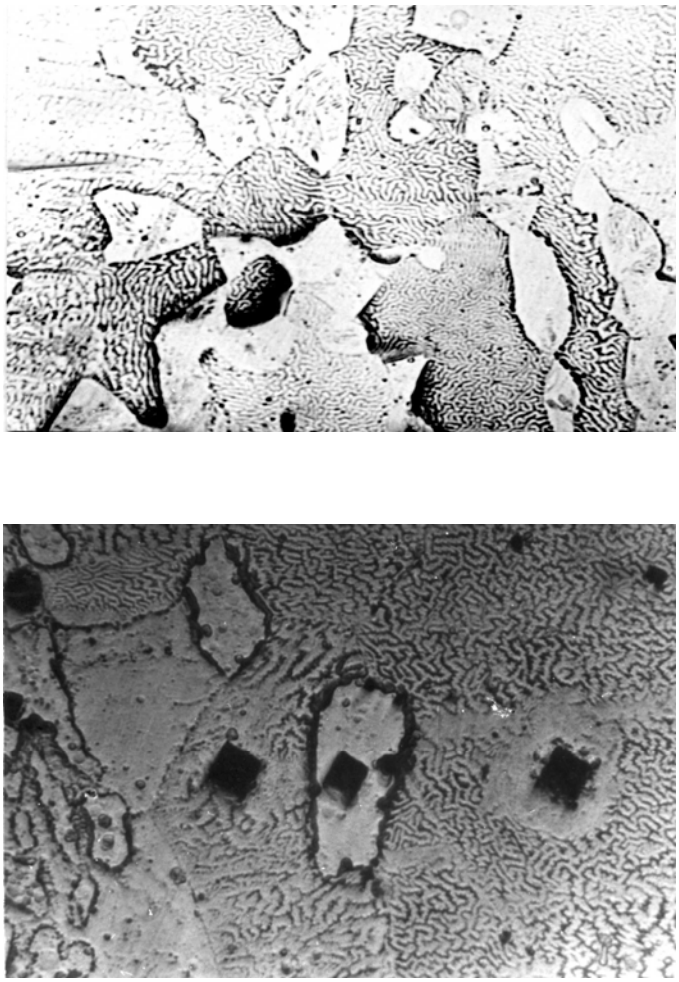

Figure 4. Characteristic magnetic areas of the samples.

4. DISCUSSION

Provided seri of the experiments with so developed apparatus and methods chows good results. The presence of the magnetic elements in the structure of the analyzed steel samples in conformed. The use of the modern semiconductor devices and possibility of the microprocessor technique created the condition for automatization and accelerating of the

research process. As the next step of the improvement of the apparatus the authors see in the digital processing of the produced pictures.

REFERENCES

[1] Grey R. I., V. K. Sikka, R. I. King, "I. Metals", 11. 1978;

[2] Vlack L. V., Materials Science for Engineers, Addison – Wesley Publ. Company, Ontario, 1975;

[3] Simeonov M.V., Konstruirane i nadejdnost na electronna appaartura, S., Technica, 1993;

[4] Streng K.K. Spravochnik po poluprovodnikovi pribori i integralni schemi, S., Technica., 1987;

[5] Lucanchevski M., System programming for single-chip microcontrollers, S., Technica, 1993.