DEVELOPMENT OF A PARALLEL CHANNEL COHERENT 433 MHZ INTERSTITIAL HYPERTHERMIA SYSTEM

Christos Marmalidis
Hellenic Navy Research Office (GETEN)
Ministry of Defense – Greece
and
Nikolaos Uzunoglu
Institute of Communication and Computer Systems
National Technical University of Athens

Abstract

The design development and technical evaluation of a prototype interstitial radio frequency system is presented. The operation frequency is 433 MHz. The system architecture is of parallel coherent channels using as radiator elements dipole elements of various lengths. Matching of each radiating element is achieved using lumped circuit elements placed close to the input of each dipole. The phase and amplitude of each channel is controlled independently electronically under a computer instructed subsystem. Phantom measurements are employed of evaluate the system performance.

1. INTRODUCTION

During the last 25 years hyperthermia has been used by various research groups as an adjuvant therapeutic modality to treat cancer tumors. Usually hyperthermia is employed as an additional treatment to radiation therapy. Until now usually the enhancement of external beam radiation therapy with hyperthermia has been examined. Despite the proven usefulness of this therapeutic approach the difficulty of achieving precise control of ionizing radiation therapy. Dose distribution and temperature (hyperthermia) distribution usually is claimed to be the reason of employing clinically this combined therapeutic approach.

It is known that one of the most precise radiation therapy technique is "Brachytherapy" which is an interstitial method. Placing small diameter tubes ($\phi < 2mm$) either metallic or plastic a high or low dose wire shaped radioactive element is moved inside tissues to achieve a highly controllable and well-specified dose distribution. Despite the practical difficulties related to surgical operations to place the tubes inside tumors, brachytherapy presently is considered to be a highly promising radiation therapy technique since a maximum differentiation is achieved in dose delivered to malignant and healthy tissues.

Considering the above arguments and the proven usefulness of using hyperthermia as an adjuvant therapy it is clear that a hyperthermia system being fully compatible with brachytherapy treatments seems to be highly attractive.

In this paper a technical description of the development of a prototype system is described. Then the evaluation of the system using phantom measurements is described.

2. MATERIAL AND METHODS

1. System Architecture

The overall system architecture is presented in Fig.1. The system consists of parallel 10 channels operating in parallel while a power divider is employed to drive each channel, which is fed from a master oscillator. The operation frequency was chosen to be 433 MHz. Considering the availability of this frequency as well its satisfactory penetration into tissue characteristics as well as the ability to have a sufficient small wavelength (within the tissues) allowing a phased array beam controlling modality. Each amplifier chain is controlled by a computed concerning the phase shift and amplitude. In principle a fully coherent 10 channels phased array operation is achieved. Each amplifier output is fed to a coaxial dipole antenna of various length. In parallel a thermocouple (30 points) temperature measurement system is also developed to provide an accurate three-dimensional mapping of temperature distribution inside the tissue to be heated. The heating and temperature measurement systems are interconnected through the computer software providing a flexible way to apply automatic control technique in hyperthermia applications in clinical practice.

The basic system specifications prior of the system development were:

- Full safety in use for both patients and operators.
- Long-term stability.
- Coherent and independent control of dipole radiator signals.
- Temperature measurement accuracy: 0.1 ^{o}C .
- Power output per channel: 20 W .
- Temperature control: Manual or Automatic.

2. Description of RF Hardware System

The hardware system that was developed consists of the following four (4) subunits:

Unit 1: Isolation Transformer.

Unit 2: Switching Power Supply.

Unit 3: Amplifier chains.

Unit 4: Master Oscillator – Preamplifier – Voltage Controlled Amplifiers.

Unit 1

Unit 1 consists of the following:

An indicator lamp, a double fuse-switch and an emergency shut down button. One 220 V AC, 1200 W isolation transformer to power the P.C., the printer and the switching power supply in unit 2.

The emergency shut down button and the isolation transformer are installed according to EN60601-1 standard on personnel safety for medical equipment.

Unit 2

Consists of a switching power supply which is powered by 220 V AC to produce 12 V DC @ 150 A. Its block diagram is shown in fig.1. The switching power supply is supervising by a relevant circuit in order to ensure that the output voltage remaining constant of any fluctuations of the input voltage.

This supervising circuit consists of an oscillator which drivers a pulse-width modulator (PWM), an error amplifier and a reference voltage source.

The error amplifier compares the reference voltage with a sample of the output voltage of the switching power supply and controls the PWM which send pulses of appropriate length back to the power supply in order to keep its output voltage constant.

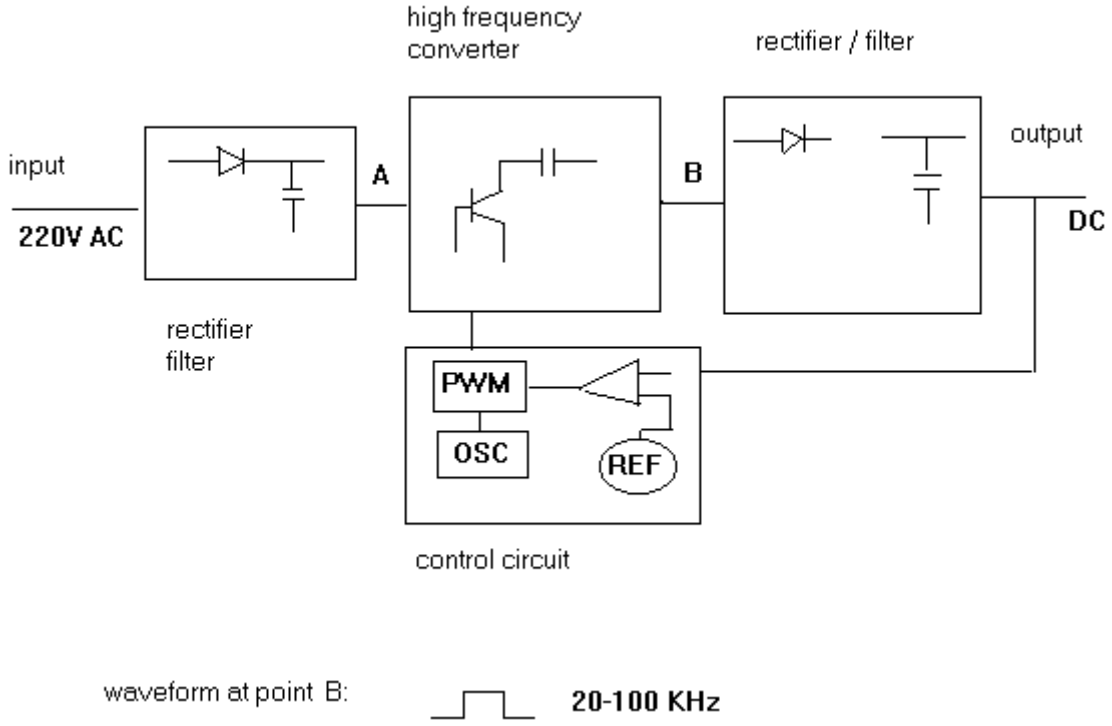

Figure 1. Block diagram of a switching power supply

Unit 3

Inside this unit, ten radio frequency amplifiers are installed, together with twenty demodulators for the measurement of the forward and reflected power.

Each amplifier is capable to deliver 0-20 Watts of RF power to the correspondy coaxial antenna. The power level is controlled by a correspondy control voltage.

Each electronic diagram of the power amplifier is shown in fig.2 and it consists of a Motorola UHF power amplifier module type MHW720-1.

For the cooling of the amplifiers, a closed circuit water cooling system is used.

Unit 4

This unit consists of:

1. Master oscillator
2. Buffer amplifier
3. Power splitter
4. Control unit
5. Pre-amplifier

The electronic diagram of the master oscillator is shown in fig.3 and it consists of 4 stages. First stage is a 48 MHz crystal oscillator (transistor BSX20). Second stage is

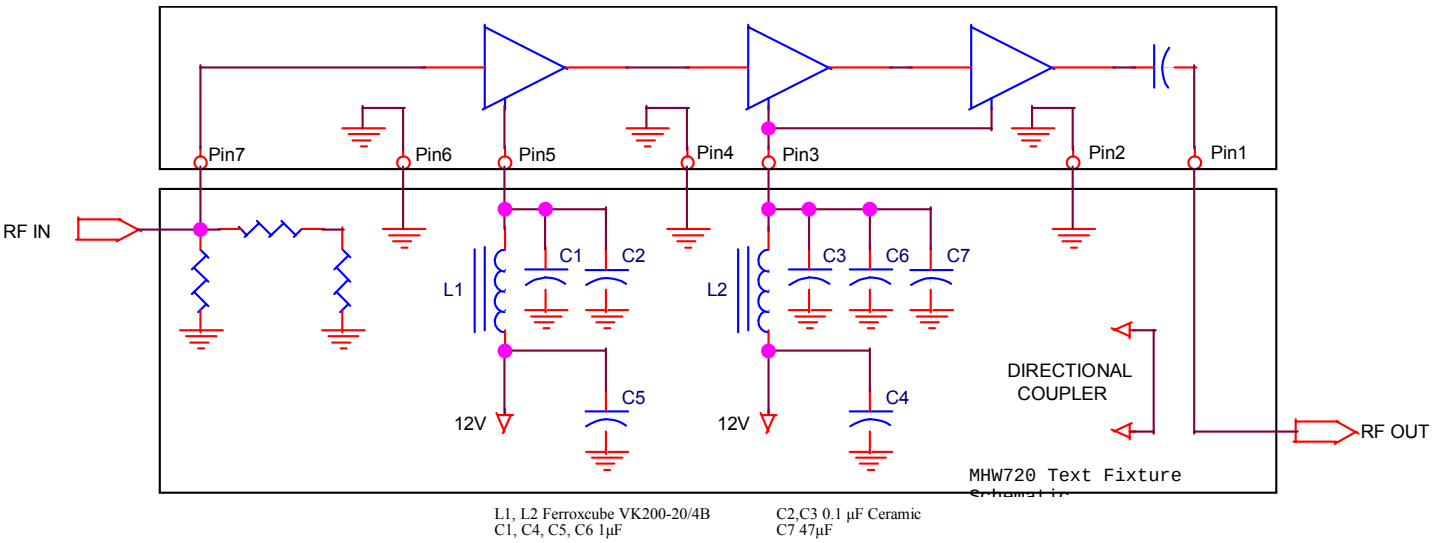

Figure 2. Electronic diagram of the power amplifier

a buffer using a BSX44 transistor. Third stage is two X3 frequency multipliers cascaded in order to raise oscillator frequency to 433 MHz using BFX44 transistors. After multiplication, the 433 MHz signal is amplified by a 10-dB amplifier to a level of 10 dBm and driven to 1:10, 50Ω power splitter.

Each of the ten power splitter outputs is driven to one of ten identical electronically controlled attenuators utilizing pin diodes. Each attenuator is independently controlled by a 0-12 V control voltage and its output finally drives one of the ten RF power amplifiers of unit 3 in order to deliver 0-20 Watts output.

4 Development of the Control System

The control system is an interface box between the P.C. and the main equipment (units 1-4).

The communications between the control system and main hyperthermia equipment, is achieved by using 10 lines to carry control voltages from the analogue memories (in the control system) to the voltage-controlled amplifiers. Twenty more lines are used to carry from the detector voltages, which are directly proportional to forward and reverse power. All this information (forward and reverse power and control voltages) is continuously displayed on the PC's screen.

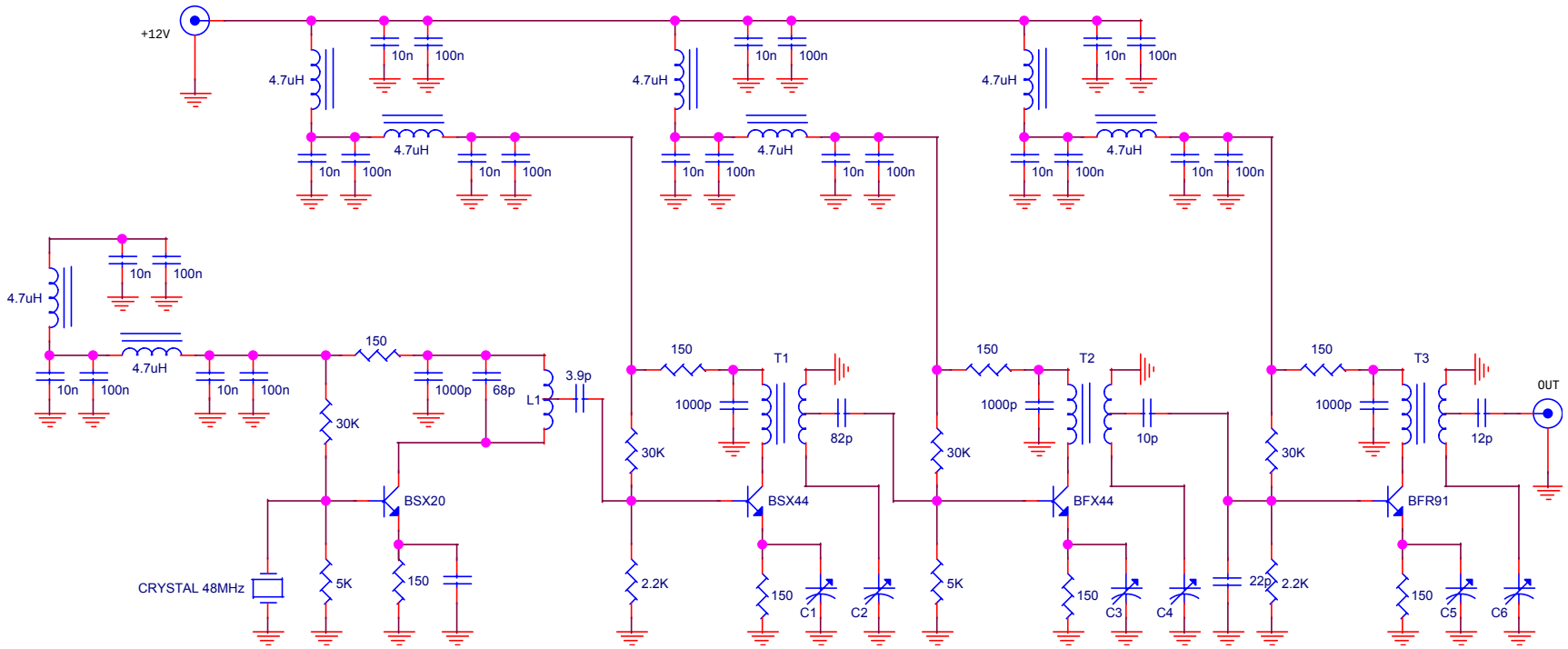

Figure 3. Electronic diagram of the master oscillator

Thermocouples are also connected to the control system. 32 points of the tumor are monitored by the thermal elements (thermocouples) and the corresponding temperatures are displayed through the control system to PC's screen.

As it is known, the aim of hyperthermia in tumor cure is the provision of heating temperatures (42-45 degrees) in the whole volume of the tumor as evenly as possible. It is therefore of ultimate importance that temperature is monitored and controlled precisely by the system. Such a system of automatic control has been realized where temperature information is collected by the thermal elements through the control system and used to control the temperature distribution throughout the tumor. The implemented procedure is as follows:

The operator from the PC's keyboard can change the control voltage of any of the 10 channels. This change which is displayed on the screen, changes the transmitted power output of the corresponding channel. The new valves of forward and reflected power are displayed also on the screen along with the new temperature valve, which resulted from the change on power.

Control box contains:

- Two 16 channel amplifier/multiplexer cards
- One 2X10 channel demultiplexer card
- One 10 channel demultiplexer with analogue memory

Thermocouples are connected to the amplifier/multiplexer inputs. Each of the two cards amplifies each of the 16 input channels with a gain of 1000 and multiplexes then to one output. The two outputs are send to the P.C. where suitable software translates and displays the temperature information of the 32 points.

Detector outputs which carry voltage proportional to the forward and reflected power are connected to the 2X10 channel multiplexer fig.4. Its output is send to the P.C. where the software translates it and displays the relevant values of forward and reflected power for every one of the 10 channels.

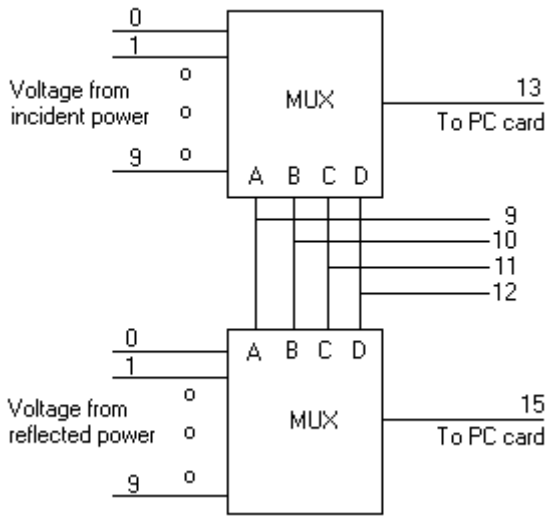

Figure 4. Multiplexers

At the 10 channel demultiplexer's input the P.C. applies a variable 0-10V voltage, and also displayed on the screen. At each of the 10 outputs of the demultiplexer, there is a sample-and-hold circuit, which realizes an analogue memory fig.5.

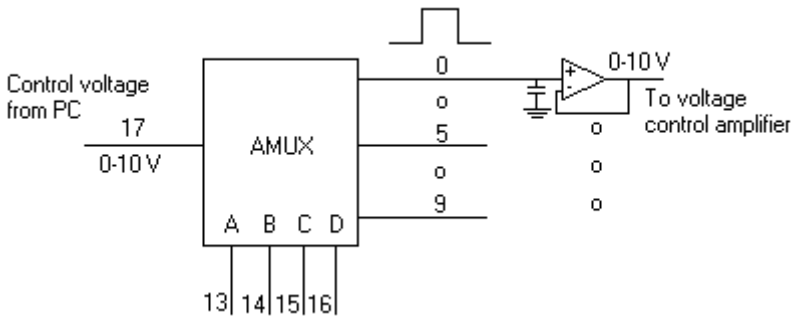

Figure 5. Demultiplexers – Analog memories

The variable 0-10V voltage from each of the sample-and-hold outputs is driven to the corresponding voltage controlled amplifier, so varying the output power of the final RF amplifiers.

5. Thermometry system

In order to achieve temperature measurements thermocouples constructed from Copper – Constantan thermal elements (type T) have been utilized. The size of such elements can be made very small thus making them suitable for biomedical applications. Besides that the use of this type of thermal elements has the following benefits :

- Measurement accuracy
- High stability and low drift over long term measurements
- Fast response time
- Simple technology
- Wide temperature range
- Low cost

The actual thermal elements were manufactured as follows:

Over a common 0.1mm Constantan wire, 4 Copper 0.07mm wires are welded every 10mm thus creating 4 thermocouple elements (fig.6). Every such unit is suitably insulated using heat shrinkable thin teflon tubing. There are 8 such units utilizing a total of 32 points.

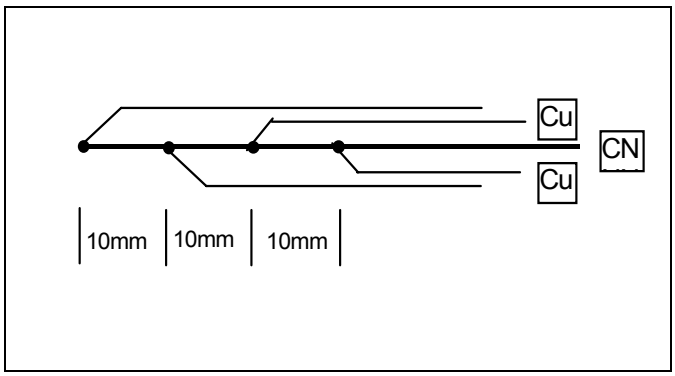

Figure 6. Construction of the thermocouple unit (4 thermocouples in series)

Another temperature sensor (LM35) provides a voltage output which is proportional to the ambient temperature and it used as reference. This I.C (LM35) is supplied with 5VDC and has a sensitivity of 10mv/^{o}C. Thermocouple sensitivity is 40mv/^{o}C. In order to achieve an overall accuracy of 0.1^{o}C, the voltage output from the thermocouples is amplified 1000 times in the amplification and multiplexing P.C board. This accuracy value is consider adequate for hyperthermia applications

The analog to digital converter has 12 bit accuracy for 1.25V input. In such a state the thermocouples will show up to 30 ^{o}C over the reference (ambient) temperature. Considery an ambient temperature of 20 ^{o}C it is possible to measure temperatures from -10 ^{o}C to +50 ^{o}C.

A calibration procedure is used to calibrate the overall system.

6. Dipole elements

Microwave antennas have been used for many years in interstitial hyperthermia. This antenna, ($\varphi = 0.2 - 2\ mm$) is inserted into a teflon catheter embedded in the tumor, thereby preventing direct electrical contact with the tissue. Already have been shown from Trembly and King that the catheters are used to improve the antennas radiated characteristics and that they are part of the antenna plan. Many studies have been published on insulated antennas of various geometries: symmetric dipoles [1], [2], asymmetric dipoles [3], multisection dipoles [4], [5] and monopoles [6].

The special requirements are that the antennas: 1) are small; 2) conform well to the catheter for easy catheterization; 3) present low return loss to avoid excessive heating of the coaxial feed-live and 5) produce a uniform heating pattern.

The interstitial applicator is made from a standard coaxial cable 0.9 mm in external diameter, of 50 Ω characteristic impedance. At the end of this coaxial cable the external conductor was removed over a length 3.5mm. The inner diameter with the dielectric is 0.7 mm (fig.7).

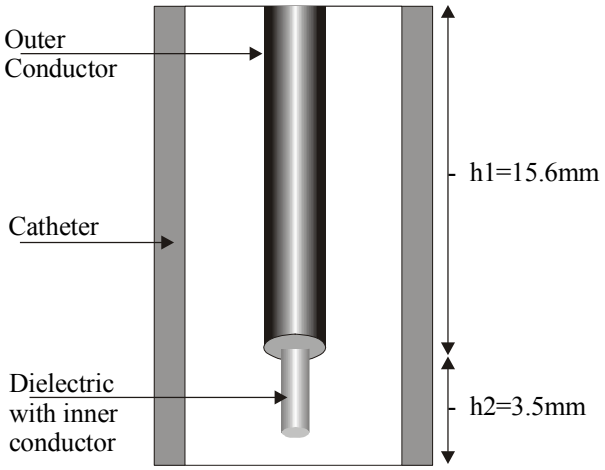

Figure 7. Description of the interstitial applicator made from a coaxial cable inserted in an implanted plastic catheter

A suitable network consists of two capacitors (piston 0-8 pF) is used to match the antenna at 433 MHz.

7. System Testing and Evaluation

Every sub-unit has been checked with measurements for proper operation and the whole apparatus for functionality. Special attention has been given in following and complying with the safety regulations and recommendations for medical equipment of such types.

Besides these measurements and checks, experimental measurements have been taken on the rate of temperature rise in various tissues and for various antenna configurations.

Every antenna configuration has been supplied with R.F power and the temperature was monitored against time in predetermined points of the setup. With this method the $\Delta T/\Delta t$ was calculated, where ΔT is the rise in temperature in ^{o}C and Δt is the time that the rise take place in sec, as shown in fig. 8.

In the following measured test cases are presented:

Configuration 1

In this configuration two antennas were placed 2cm apart. For temperature measurements two thermal probes were used (TC1, TC2), each utilized 4 thermocouples spaced every 1cm. TC1 was placed at the middle between the two antennas and TC2 1cm away of one of the antennas (fig. 9). Using this setup two

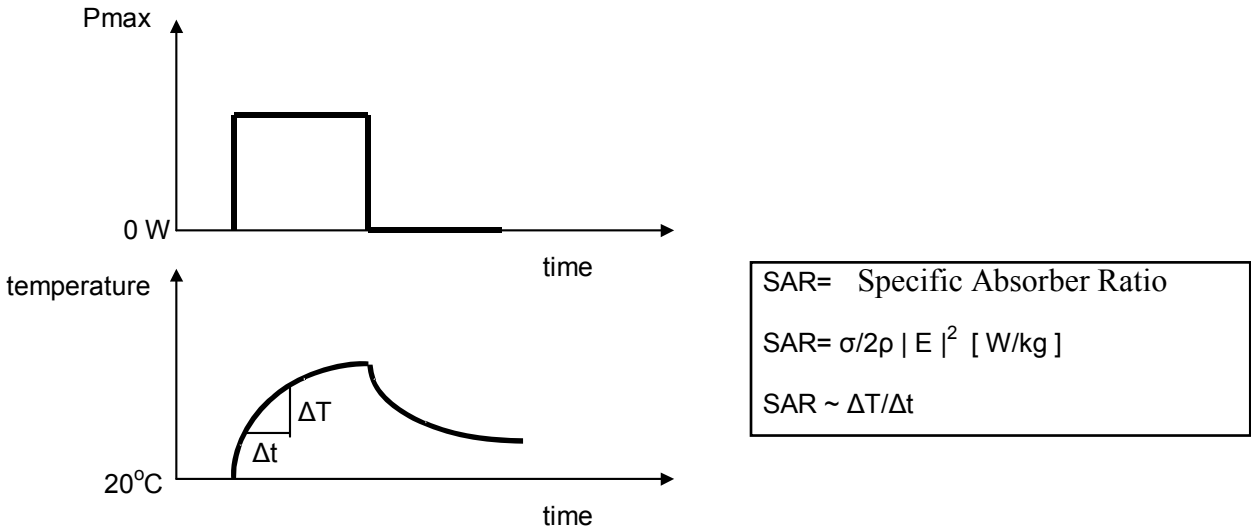

Figure 8. Relation between power and $\Delta T/\Delta t$ ratio

sets of measurements were taken and stored separately. Table 1 shows the number of measurements, the time Δt for which the measurements were taken, the mean forward power F and the mean reflected power R for each of the two sets.

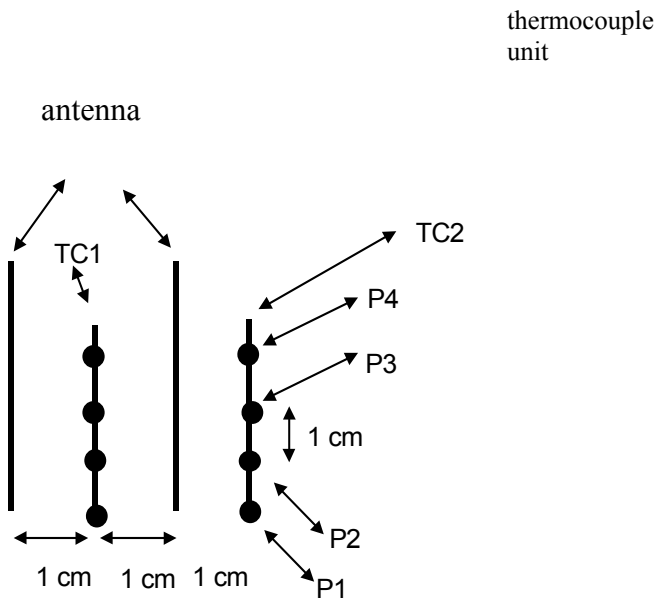

Figure 9. Configuration of the first measured test case

From this data and for every set, the ΔT/Δt was calculated for every measurement point P1,P2,P3,P4. Results are shown in figure (10).

file	Δt	$\overline{F}$	$\overline{R}$	Number of measurments
marm1.xls	4.95min	15	6	10
marm9.xls	12.86min	13	2	26

Table 1 Files with the measurement results of the mean forward (F) and reflected (R) power

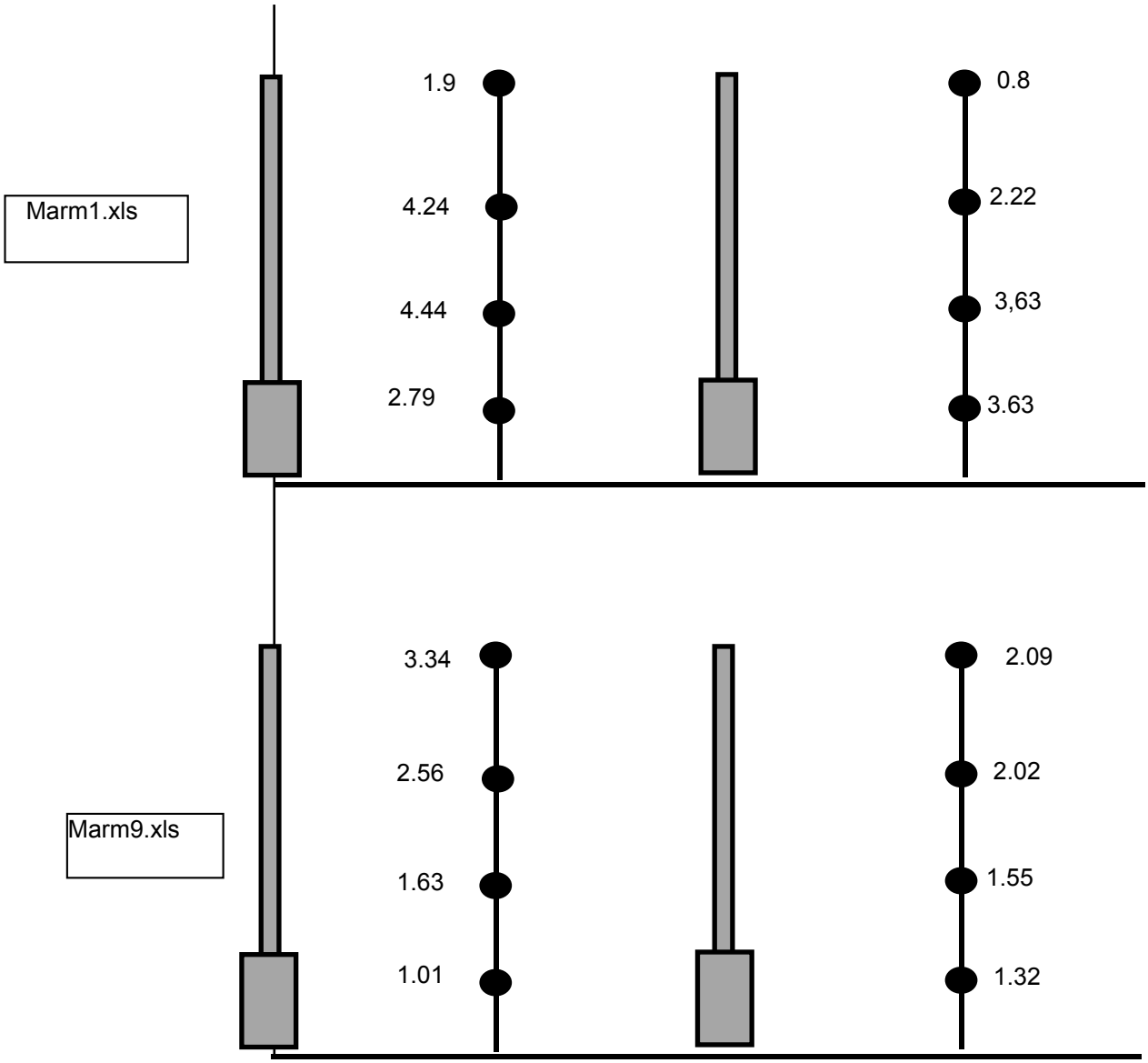

Figure 10. ΔT/Δt ratio measurements of the 1st configuration

Observation notes on configuration 1

The measured temperatures between the antennas are higher than the respective values away of the antennas. This is of course expected as it is due to additive effect of co-phase coherence of the wave. This complies with theory. The maximum values seems to be at a distance (height) 3cm from the tip of the antennas,

below and beyond which there is a drop in the rate of rise in temperature. In "marm9.xls" (fig. 10) measurement set there is a shift in maximum towards the tip of the antennas which is probably caused by different insertion depth of the antennas.

Finally it is observed that reflected power follows forward power.

Configuration 2

This configuration is shown in fig(11). Two set of measurements were again taken and stored separately. Results are shown in table 2. From this data $\Delta T/\Delta t$ was again calculated as shown in fig.(12).

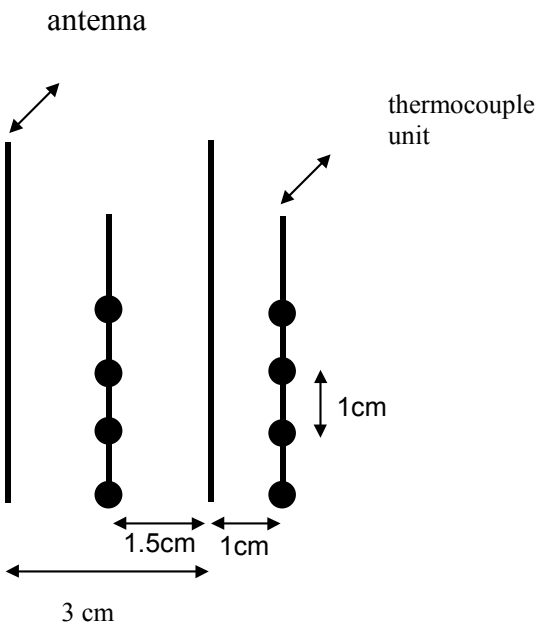

Figure 11. Configuration of the first measured test case

				Number of

file	Δt	F	R	measurments
marm4.xls	1.3min	17	7	5
marm10.xls	12.28min	13	2	43

Table 2 Files with the measurement results of the mean forward (F) and reflected (R) power

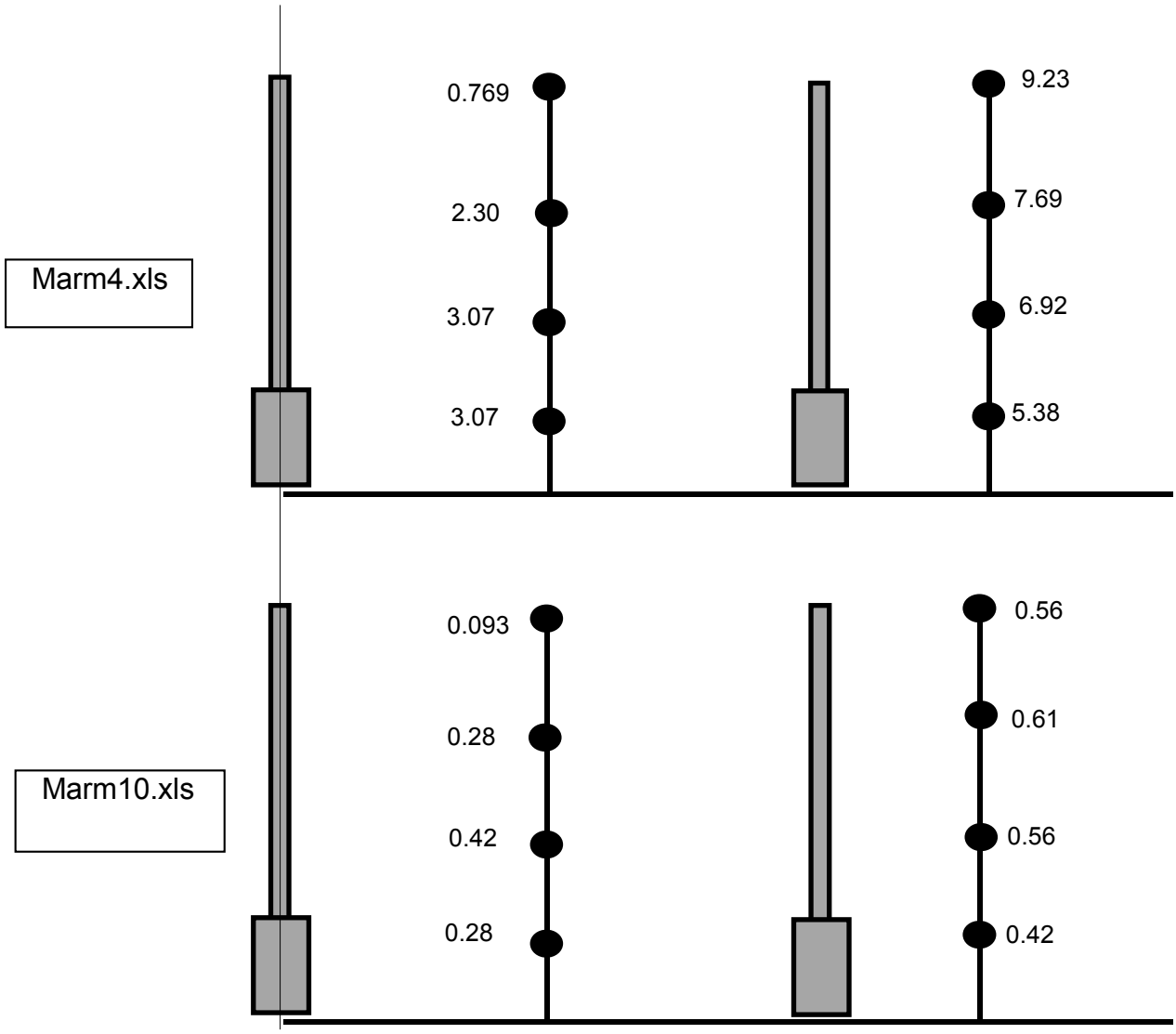

Figure 12. ΔT/Δt ratio measurements of the 2nd configuration

Observation notes on configuration 2

Because of the distance between the antennas has been increased, values between the antennas are smaller than the corresponds external ones. There is a maximum value between the antennas and at the distance of 3cm from the top of the antenna while at the outside area there is a shift of the maximum towards the tip and values are less as we move back towards the feed line. Corresponds values are larger in "marm4.xls" because higher power was used.

Comparing measurements of configuration 1 and 2 we can easily see that the optimum distance between antennas is 2cm because at that distance we can obtain larger rate of increase in temperature ($\Delta T/\Delta t$) between the antennas compared with $\Delta T/\Delta t$ in the outside area.

General observations- Notes

The experimental results of the hyperthermia system for different antenna arrangements are in compliance with theory and together with the other electrical and electronic measurements prove the correct operations of the system

During experimental measurements it was noted that the semi-rigit cable that the antennas are made from was heated in the part outside the tissue. This was due the existence of standing waves (reflected power). This constitutes a complex problem as the antennas impedance changes with tissues type (due to different dielectric constants) and insertion depth As a remedy to this problem it is suggested that antennas are fed with less power (<15W). Use of a different type on antenna might solve the problem.

8. Conclusions

The design and development of a prototype interstitial microwave hyperthermia is presented. The unique characteristics of the developed system are the coherency among the 10 independent microwave (433MHZ) channels and the large number of temperature measurement points within the tissues to be heated as well as the full compatibility of the system with brachytherapy radiation therapy systems. The developed system has been tested using phantoms which showed the proper operation of the interstitial hyperthermia system. Testing to experimental animals should be done to verify the efficiency of the developed system in treating tumors.

Acknowledgment: Authors would like to thank the cooperation with Prof. N. Zamboglou, Director of Radiation Therapy Clinic, Metropolitan Hospital of Offenbach, Germany.

REFERENCES

[1] R.W.P. King, B. S. Trembly, and J. W. Stronbehn, "The electromagnetic field of an insulated antenna in a conductin or dielectric medium", IEEE Ttans. Microwave Theory Tech., vol. 31, no. 7, pp. 574-583, July 1983.

[2] J. P. Casey and R. Bansal, "The near field of an insulated dipole in a dissipative dielectic medium", IEEE Ttans. Microwave Theory Tech., vol. MTT-34, no. 4, pp. 459-463, Apr. 1986.

[3] Y. Zhang, N.V. Dubal, R. Takemoto-Hambleton, and W.T. Joines, "The determination of the electromagnetic field ans SAR pattern of an interstitial applicator in a dissipative dielectric medium", IEEE Trans. Microwave Theory Tech., vol. 36 no. 2, pp. 238-246, Feb. 1989.

[4] M. F. Iskander and A. M. Tumeh, "Desing optimization of interstitial antennas", IEEE Trans. Biomed. Eng., vol. 36, no. 2 pp. 238-246, Feb 1989.

[5] A. M. Tumech and M. F. Iskander, "Performance comparison of available interstitial antennas for microwave hyperthermia", IEEE Trans. Microwave Theory Tech., vol. 37, pp. 1126-1133, July 1989.

[6] J. J. Fabre, M. Chive, L. Dubois, J. C. Camart, E. Playez, B. Prevos, L. Vanseymortier and J. Rohart, "915 MHz microwave interstitial hyperthermia. Part 1: Theoritical and experimental aspects with temperature control by multifrequency radiometry", Int. J. Hyperthermia, vol. 9, no. 3, pp. 433-444, 1993.