BANDWIDTH EFFICIENT CONCATENATED CODING SYSTEM USING HYBRID TRELLIS 16/8-PSK INNER CODE

N. T. Kostov

Faculty of Electronics, Technical University of Varna,
1 Student str., Varna 9000, Bulgaria
E-mail: ntkostov@abv.bg

Abstract

High rate concatenated coding system with Reed-Solomon (RS) outer code and hybrid (time-varying) trellis 16/8-phase shift keying (PSK) inner code is investigated for application in high-speed satellite communications. The performance results of the proposed coding system over an ideal Gaussian channel indicate a slight energy loss of 0.5-0.6 dB compared to an equivalent (in terms of effective data rate and complexity) conventional coding system. However, a robust performance with an improved carrier tracking over non-Gaussian channels, like channels with phase jitter and Rice fading, is still possible. Furthermore, there is no need for linear or quasi-linear amplification, which is not the case with the near situated concatenated (204, 188)RS / trellis-coded (TC) 16-QAM coding system, considered by the European Standard EN 301 210 V1.1.1.

1. INTRODUCTION

A coding system commonly used in fixed satellite communications consists of a convolutional inner code with quadrature phase shift keying (QPSK) concatenated with an outer Reed-Solomon (RS) code. Concatenated coding has long been used as a practical means of achieving large coding gains [2, 4, 7]. However, the overall effective information transmission rate of a conventional concatenated coding system with a rate 1/2 convolutional inner code and QPSK is less then 1 bit/s/Hz.

Various concatenated coding systems with trellis-coded (TC) M-ary PSK as inner codes were investigated by Deng and Costello [3]. Currently, the European Standard (Telecommunications series) EN 301 210 V1.1.1 also consider the use of high rate concatenated (204,188) RS/TC coding schemes with 8-PSK and 16-level quadrature amplitude modulation (16-QAM) in satellite Digital Video Broadcasting (DVB) services. However, in the presence of carrier phase offset, it has been shown that conventional TC schemes are more sensitive then uncoded schemes [1, 8]. This is due to the signal set expansion encountered with TC modulation.

A more robust performance on phase offset channels can be achieved by using hybrid TC 2^{m+1} / 2^{m} -point PSK schemes (m is the number of information bits per signal) [8]. The cycle slip rate simulation of a hybrid TC 8/4-PSK system on a

channel with phase jitter shows significant improvement compared to the equivalent conventional TC 8-PSK system [8]. In this paper, a concatenated RS/TC coding system with time-varying trellis 16/8-PSK inner code is studied. As will be shown, a robust performance over an additive white Gaussian noise (AWGN) channel is still possible.

2. SYSTEM MODEL AND PERFORMANCE

The considered concatenated coding system is shown in Fig.1. The information sequence of Kb bits is divided into K symbols of b bits each, and each b bit symbol is regarded as an element of $GF(2^b)$. The output of this Reed-Solomon (RS) encoder is an N -symbol codeword, which is symbol interleaved and then serially encoded by the time-varying trellis encoder.

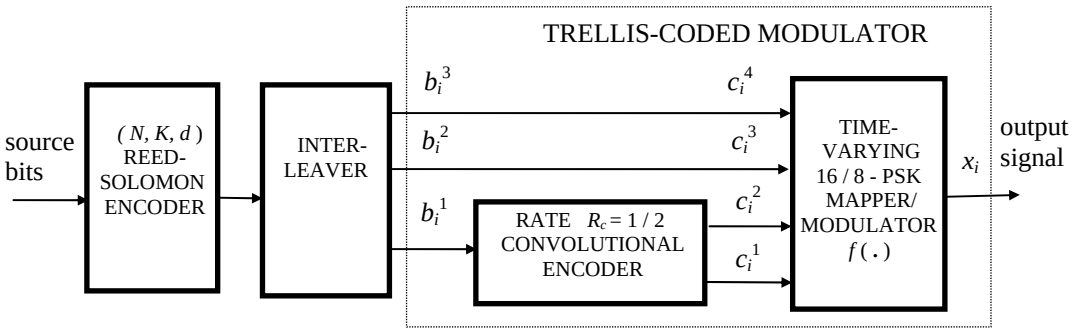

Figure1. A concatenated coding system model

Formally, a hybrid TC 2^{m+1} / 2^m -point system is defined whenever there present at least one TC 2^{m+1} -point and one TC 2^m -point signal section in one finite mapper period T_{mp}. In conventional TC M-ary PSK the mapper output is time invariant. The purpose of the time-varying mapper is to make a 2^{m+1} -point M-PSK constellation appear to be more 2^m - PSK like by periodically inserting transmitted 2^m - point PSK sections among the transmitted 2^{m+1} -point PSK signals. This makes phase tracking in the presence of phase offset more robust by doubling the carrier pull-in range for the 2^m -point PSK sections (in case of equi-spaced PSK constellations). Note that the effective information transmission rate, denoted as R_{TC}, of both the conventional scheme and the hybrid scheme is m bit/s/Hz (assuming perfect Nyquist filtering).

It is natural to express the efficiency of such a hybrid TC 2^{m+1} / 2^m -point system. We define the weight of 2^m -point signal sections, $W(2^m)$, as

$$W(2^m) = \frac{N(2^m)}{N(2^{m+1})} , \qquad (1)$$

where $N(2^m)$ is the total number of 2^m -point signal sections in the finite mapper period T_{mp} and $N(2^{m+1})$ is the largest number of consecutively transmitted 2^{m+1} -point signal sections in T_{mp}. This definition come of the fact that in a rough environment, like jitter or complex fading, the decision-directed carrier recovery methods based on the embedded 2^m -point sections are more robust and give better results. It is clear that $1/(T_{mp} -1) \leq W(2^m) \leq (T_{mp} -1)$ and for $W(2^m) = (T_{mp} -1)$, $T_{mp} \to \infty$, the hybrid TC 2^{m+1} / 2^m -point system acts as a stationary TC 2^m -point system, however, with different mapping and trellis structure.

The time-varying TC 16/8-PSK scheme in Fig.1 has a mapping period $T_{mp} = 2$ (i.e., 16-PSK and 8-PSK mappings alternate) with parity check polynomials of the memory $n = 2$ systematic feedback convolutional encoder $h^0 = (05)_8$, $h^1 = (02)_8$ [6, 9]. The considered 16-PSK and 8-PSK mappings are shown in Fig.2 and Fig.3, respectively.

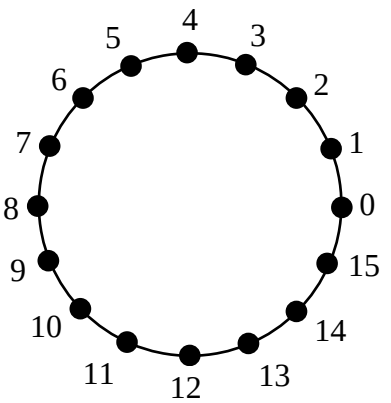

Figure 2. Conventional 16-PSK mapping

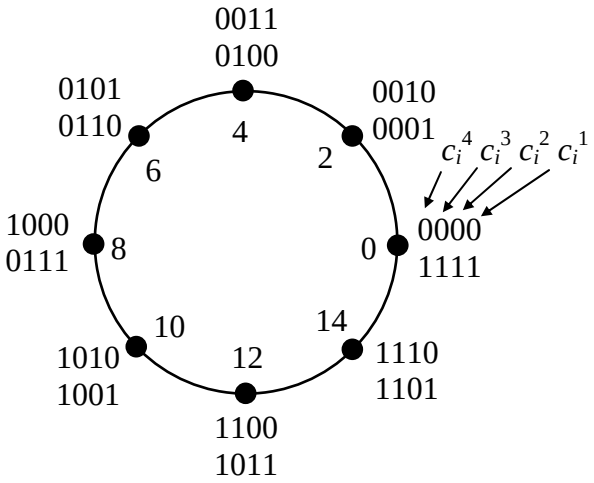

Figure 3. 8-PSK mapping for the encoder with generators $h^0 = (05)_8$, $h^1 = (02)_8$

In the case of TC 16-PSK transmission, a natural mapping into the set { 0, 1, 2, 3, 4, …, 14, 15 } is assumed, while for TC 8 - PSK transmission, the mapping is into the ordered set { 0, 2, 2, 4, 4, …, 14, 0 } and the correspondence between the binary code vectors $\boldsymbol{c}_i = [c_i^1, c_i^2, c_i^3, c_i^4]$ and the 8-PSK signals x_i is two-to-one.

The trellis diagram of the conventional TC 16-PSK scheme is shown in Fig.4. We partition the 16-PSK signal set into four *D*-groups, each consisting of four signal

points: $D0$ ={ 0, 4, 8, 12 }, $D1$={ 1, 5, 9, 13 }, $D2$={ 2, 6, 10, 14 } and $D3$ = { 3, 7, 11, 15 }, and these are used as labels for the branches of the trellis diagram in Fig.4.

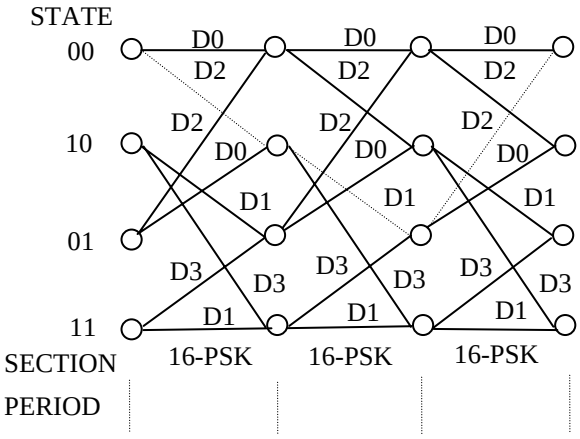

Figure 4. Trellis diagram for the conventional TC 16-PSK scheme

According to Fig.4, the free Euclidean code distance d_e^2 is determined by

$$d_e^2 = \min\{\min d^2(x_i \in D0, x_i' \in D0);\ \min d^2(x_i \in D0, x_i \in D2) + \\ + \min d^2(x_{i+1} \in D0, x_{i+1} \in D1) + \min d^2(x_{i+2} \in D0, x_{i+2} \in D2)\}, \quad (2)$$

where $d^2(.,.)$ is the squared Euclidean distance between two different TC 16-PSK signals. Thus, we have d_e^2 = 1.324, and the error event paths leading to it are shown with a dash line in Fig.4. Note that we deal with an Ungerboeck-type code, which is both time-invariant and distance-invariant [1, 5].

Now, consider the time-varying trellis diagram shown in Fig.5. The time-invariant property of the Ungerboeck-type codes is no longer valid and all error events starting in both the 16-PSK and the 8-PSK section have to be evaluated. Note also that new code distances are formed compared to the conventional scheme. For example, the set of squared Euclidean distances (with all the paths starting in a 16-PSK signal section) $\{d^2(x_i \in D0, x_i \in D2) + d^2(x_{i+1} \in D0, x_{i+1} \in D2) + d^2(x_{i+2} \in D0, x_{i+2} \in D2)\}$ in Fig.5 can't be seen on the trellis diagram of the conventional TC 16-PSK scheme. Furthermore, the 8-PSK mapping { 0, 0, 2, 2, 4, 4, . . ., 14, 14 } results in a catastrophic behavior of the hybrid TC 16/8-PSK (T_{mp} = 2) scheme for the considered convolutional encoder. Thus, the choice of the time-varying rule is critical.

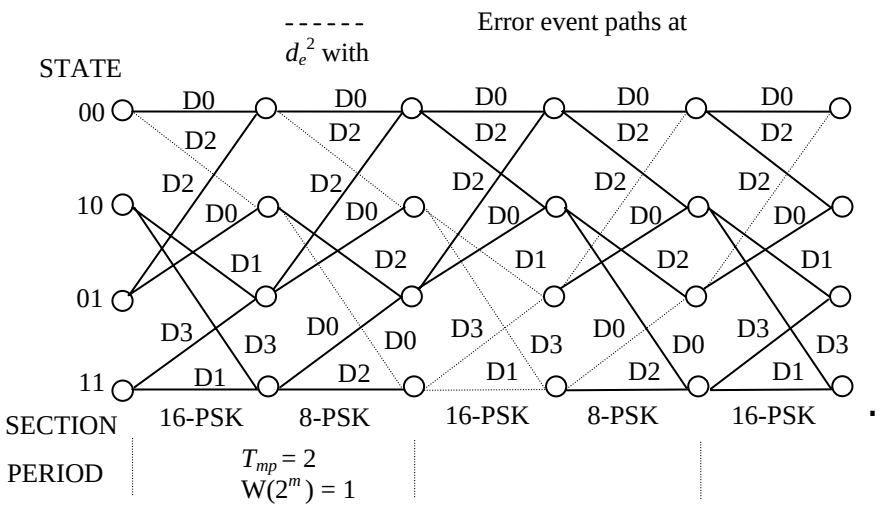

Figure 5. Time-varying trellis diagram for the hybrid TC16/8-PSK scheme

When the Viterbi algorithm is used in the trellis code decoder, the decoding complexity Γ is given by [5, 6]

$$\Gamma = \frac{2^{n+k}}{L}, \tag{3}$$

where n is the trellis code memory, k is the number of encoded bits per trellis transition and L is the number of two-dimensional signals per trellis transition. In fact, this is the number of distinct transitions in the trellis diagram for any TC scheme normalized to a two-dimensional signal set. Thus, the complexity of the Viterbi decoder for both the hybrid TC scheme and the conventional TC scheme will be the same.

The main parameters of the considered TC schemes are summarized in Table I.

Table I.
MAIN TC 16-PSK AND
TC 16/8-PSK SYSTEM PARAMETERS

	TC 16 – PSK [6] R_{TC} = 3 bits/s/Hz Γ = 8	TC 16 / 8 – PSK R_{TC} = 3 bits/s/Hz Γ = 8
G_c (dB)	3.54	3.54
d_e^2	1.324	1.324
N_b	16	44

As listed in Table I, the free code distance d_e^2 of the hybrid TC 16/8-PSK scheme is still 1.324 as in the conventional TC 16-PSK scheme [6] and the 3.54 dB coding gain (denoted as G_c in Table I) over uncoded 8-PSK is preserved. Only the bit error coefficient N_b (which is obtained by assuming all-zero path as a reference path) is grown by about factor of three. This is due to the larger average number of error event paths at d_e^2 for the hybrid scheme compared to the conventional scheme.

Let the transmission for the concatenated coding system in Fig.1 takes place on an ideal AWGN channel with perfect phase recovery. Then, the final decoded bit error rate (BER) at the output of RS code decoder is closely approximated by [3]

$$P_{bf} \cong \frac{d}{2N} \sum_{i=t+1}^{N} C_N^i (bP_b)^i (1-bP_b)^{N-i}, \tag{4}$$

where d is the minimum distance of the (N, K, d)RS code with symbols over $GF(2^b)$, $t = [(d\text{-}1) / 2]$ is the error correcting capability of the RS code and P_b is the bit error probability at the Viterbi decoder output. The overall effective information rate R_{eff} of the concatenated coding system in Fig.1 is

$$R_{eff} = R_{\mathrm{TC}} \frac{K}{N} = R_{\mathrm{TC}} R_{\mathrm{RS}} \quad \mathrm{bit/s/Hz}, \tag{5}$$

where R_{TC} is the rate of the hybrid TC 16/8-PSK modulator in bit/s/Hz and $R_{\mathrm{RS}} = K / N$ is the rate of the (N, K, d)RS code. Furthermore, the coding gain of the concatenated coding system will be given with reference to an uncoded system with the same effective information rate as the coded system [3], i.e., $2^{R_{eff}}$ -ary PSK modulation with normalized squared Euclidean distance

$$d_0^2 = 2 - 2\cos(2\pi / 2^{R_{eff}}). \tag{6}$$

Since $2^{R_{eff}}$ may not be an integer, this uncoded reference system may be only hypothetical [3]. It is used for comparison purposes since it has exactly the same effective information rate as the coded system.

The asymptotic coding gain of the concatenated coding system (in decibels) is [3]

$$\gamma = 10\log_{10}[d_e^2 (t+1) / d_0^2], \tag{7}$$

where d_e^2 is the free Euclidean distance of the inner trellis code.

According to (1), the estimated (255, 223, 33) RS / TC 16-PSK and (255, 223, 33) RS/TC 16/8-PSK coding systems performance is given in Table II.

Table II.

ESTIMATED (255, 223, 33) RS / TC SYSTEMS PERFORMANCE

	RS/TC 16 – PSK R_{eff} = 2.62 bits/s/Hz γ = 13.7 dB	RS/TC 16 / 8 - PSK R_{eff} = 2.62 bits/s/Hz γ = 13.7 dB
E_b / N_0 (dB) for $P_{bf} \approx 10^{-6}$	8.74	9.34
E_b / N_0 (dB) for $P_{bf} \approx 10^{-8}$	8.96	9.53
E_b / N_0 (dB) for $P_{bf} \approx 10^{-10}$	9.15	9.7

3. CONCLUSION

In this paper, a high rate concatenated RS/hybrid TC 16/8-PSK code system is studied. For the considered trellis inner code one has the option to perform the synchronization only with the embedded 8-PSK signal sections. In this case, the carrier pull-in range of the proposed system is doubled compared to the conventional system. Compared to the conventional (255, 223, 33) RS/TC 16-PSK system, the energy loss in terms of E_b / N_0 on the AWGN channel is below 0.6 dB for BER values of practical importance.

The benefits of the concatenated RS/hybrid TC 16/8-PSK coding system will be obvious on non-Gaussian channels, like channels with phase jitter and Rice fading, where a considerable degradation in system BER performance is encountered due to carrier phase imperfections. Furthermore, the complexity of the maximum likelihood (Viterbi) receiver is not increased for the hybrid TC 16/8-PSK scheme. For a standard packet-based transmission, a minor addition is the requirement of more detailed frame synchronization.

It would be interesting to further investigate the considered here approach to other time-varying signal constellations such as star 16-QAM/8-QAM and 32QAM/16-QAM. Further work should be done in this area.

REFERENCES

[1] E. Bigliery and P.J. McLane, "Uniform Distance and Error Probability Properties of TCM Schemes," IEEE, Trans. on Communications, vol. 37, pp. 41-52, Jan. 1991

[2] D. J. Costello, et al., "Applications of Error-Control Coding," IEEE, Trans. on Inf. Theory, vol. 44, pp. 2531-2560, Oct. 1998

[3] R. H. Deng and D. J. Costello, "High rate concatenated coding systems using bandwidth efficient trellis codes," IEEE, Trans. on Communications, vol. 37, pp. 41-52, May 1989

[4] D. Divsalar and J. H. Yuen, "Performance of Concatenated Reed-Solomon/ Viterbi Channel Coding," NASA, Jet Propulsion Laboratory, TDA Progress Report 42-71, pp. 81-94, Nov. 1982

[5] G. D. Forney, Jr., "Coset Codes - Part I: Introduction and Geometrical Classification," IEEE, Trans. on Inf. Theory, vol. 34, pp. 1123-1151, Sept. 1988

[6] S. S. Pietrobon, et al., "Trellis-coded multidimensional phase modulation," IEEE, Trans. on Inf. Theory, vol. 36, pp. 63-89, Jan. 1990

[7] F. Pollara and K.-M. Cheung, "Performance of Concatenated Codes Using 8-Bit and 10-Bit Reed-Solomon Codes," NASA, Jet Propulsion Laboratory, TDA Progress Report 42-97, pp. 194-201, May 1989

[8] C. W. Sundberg and J. Hagenauer, "Hybrid trellis-coded 8/4-PSK modulation systems," IEEE, Trans. on Communications, vol.38, pp. 602-613, May 1990

[9] G. Ungerboeck, "Channel coding with multilevel/phase signals," IEEE, Trans. on Inf. Theory, vol. IT-28, pp.55-67, Jan. 1982