OPTOELECTRONIC REPEATER – COUPLER – ACTIVE DEVICE FOR FIBER OPTIC LOCAL AREA NETWORKS

Ethon Odysseus Narlis

Hellenic Aerospace Industry, Training Directorate,
P.O. Box 23, GR-32009, Schimatari, Greece
enarlis@cc.ece.ntua.gr

Abstract

An optoelectronic analog repeater – coupler circuit for fiber optic local area network applications is described. The device is suitable for interfacing the electronic circuits of subscriber equipment on the fiber without interrupting the physical layer and the real time connection of the other subscriber equipment. The circuit has the aspect of the conventional operational amplifiers, and the experimental results are close to the simulations assuring the validity of the design philosophy.

1. INTRODUCTION

Y – type passive fiber couplers, conventionally realizes the connection of different equipment on fiber networks of various topologies. Among the conventional network topologies, which are ring, bus and tree, open ring architecture has been developed [1,2].

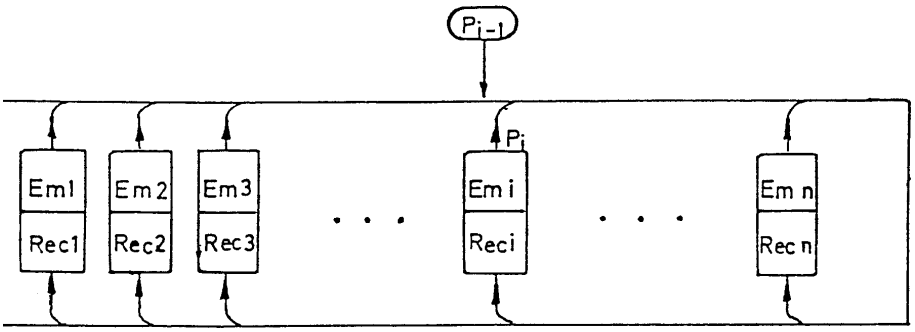

Figure 1. Architecture of an open ring network. P_{i-1} corresponds to the optical power of the signal emitted from the first subscriber equipment when arrives at the connection of the ith subscriber equipment.

This particular network uses the spread spectrum / code division-multiplexing technique as a distributed controller and assures full duplex high secure communication between equipment connected on the network. This technology makes possible to all equipment on the network to communicate without being jammed by the messages of other neighboring devices, which are connected and communicating simultaneously through the line as well. It has to be noted that the optical is the signal circulating into the fiber is the superposition of all randomly emitted binary optical messages of the communicating subscriber equipment.

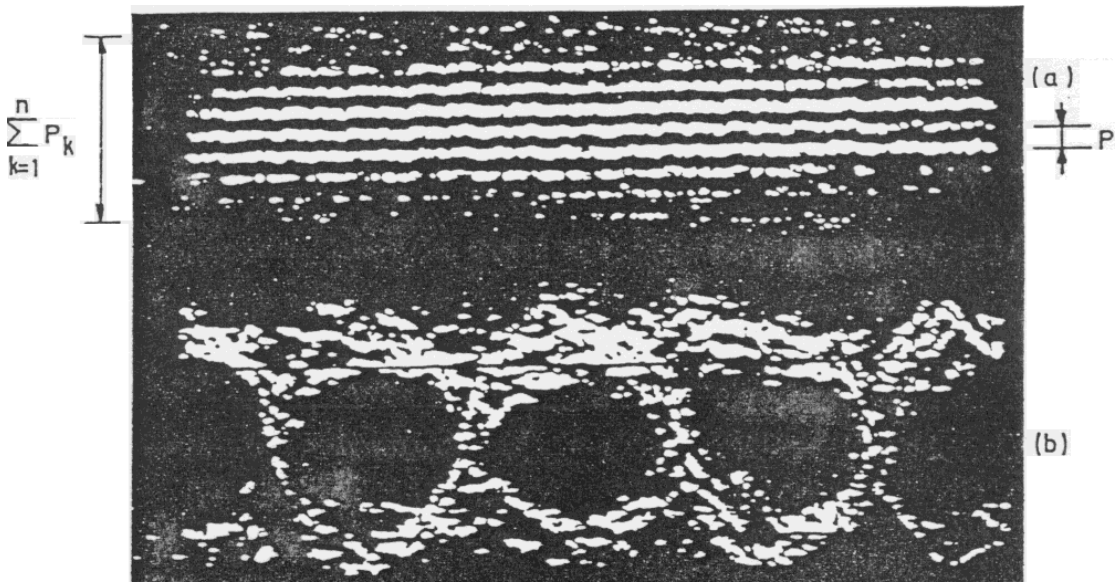

Figure 2. (a) The optical is the signal circulating into the fiber is the superposition of all randomly emitted binary optical messages of the communicating subscriber equipment. P_i is the optical power corresponding to the emission of one subscriber equipment. (b) The detection of one specific message.

The Y - type passive fiber couplers are not suitable for the new type of networks described in [1,2] for the following reasons [2]:

- The additive loss introduced by each coupler necessitates the use of many repeaters if cascade connection is to be used.
- Each one of the subscriber equipment has to emit different power level depending to its physical location on the network.

This last feature depends to the equation (1):

$$P_i = P_{i-1} + a_{ci} - CE_i \quad (1)$$

where P_i is the power to be emitted by the ith. Subscriber equipment, P_{i-1} is the power on the reference point i-1 (figure1), a_{ci} the coupler transmission efficiency and the CE_i the individual coupling efficiency of the coupler.

This is necessary for having a balanced physical layer regarding to the power levels circulating into the fiber, thus for avoiding a possible jamming of the signals emitted from the distant subscriber equipment and therefore more attenuated by passing through many splices and couplers.

The above-described problems make the network hard of use and limit seriously its future expansion. To overcome these problems and in order to make the network more flexible the optimal solution is to use an optoelectronic repeater - coupler device - ORCA.

2. DESIGN OF AN OPTOELECTRONIC REPEATER – COUPLER

2.1. Basic requirements for the device

The ORCA primary must realize the repeater and coupler functions simultaneously. It must receive the circulating optical signal, transform it to an electrical signal, receive the electrical signal of the local subscriber equipment, sum it with the previous signal and convert the resulting electrical signal to optical signal and reinsert it into the fiber. This function is clearly shown in figure 3.

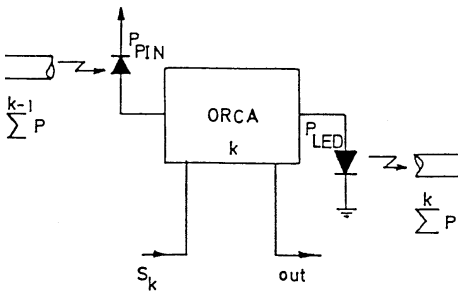

Figure 3. Block diagram of an optoelectronic repeater – coupler

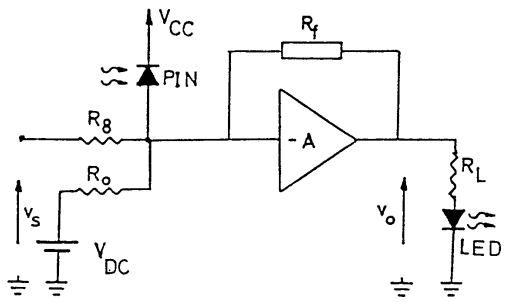

Figure 4. Simplified functional diagram of the ORCA

It goes without saying that the device must restitute the loss of the previous connections in order to assure the repeater function. This primary repeater function can be described with the following equation:

$$\left(\frac{P_{LED}}{P_{PIN}}\right)_{rep} = k_{PIN}k_{LED}\left(\frac{I_{LED}}{I_{PIN}}\right)_{rep} = -(a_{fp} + a_{fl} + a_f) \tag{2}$$

where P_{LED} is the output power of the light emitting diode, P_{PIN} is the power arriving on the photodiode's surface, k_{PIN} and k_{LED} are respectively the responsivity (mA/mW) of the photodiode and the average (mW/mA) of the LED, I_{LED} and I_{PIN} are respectively the current driving the LED and the current generated by the photodiode of the repeater. Finally, a_{fp}, a_{fl}, a_f are the fiber-PIN interface loss, the fiber-LED interface loss and the fiber attenuation.

To realize the coupler function lets assume the total subscriber number n. Considering the form of the signal circulating in the fiber (figure 2), this is the sum of the optical powers emitted by n subscribers (thus corresponding to n simultaneous messages), The logical consequence is that the driving current of the kth. LED carrying the information S_k of the kth. subscriber must be of adequate amplitude to generate optical power equal

to the 1/n of the total optical power circulating in the fiber. If the maximum allowable driver current of the selected LED is $(I_{LED})_{max}$, then the current which has to be generated by the kth message s_k must be:

$$\left(I_{LED}\right)_k = \frac{(I_{LED})_{\max}}{n} \tag{3}$$

It has to be noted that the LED response is considered as linear up to the $(I_{LED})_{max}$ drive current value. For a subscriber message s_k(V), the coupling efficiency of the ORCA would be:

$$\frac{(I_{LED})_k}{s_k} = \frac{(I_{LED})_{\max}}{ns_k} \quad \text{(mA/V)} \tag{4}$$

The use of ORCAs of variable gain will compensate the power losses due to bad connections or LED aging as well as power rises in cases of operations in low temperature environment.

The cutoff frequency of each individual ORCA on the network must fulfill the equation of the cutoff frequency of each individual stage for a cascade connection case. Thus, if the frequency of the signal circulating in the fiber is f and the total number of the ORCAs on the network 2n (each subscriber equipment has two ORCAs, one for the transmission and one for the reception) then the high cutoff frequency of each ORCA must be:

$$f_k = \frac{f}{\sqrt{\sqrt[2n]{2} - 1}} \text{ which can be simplified [2] as: } f_k \approx 1.1\sqrt{2n}\, f \tag{5}$$

2.2. Design of the electronic circuit

The ORCA consists essentially by a vide band amplifier with trans-impedance feedback and summation circuit configuration (figure 4).

Assuming the components ideal with an open loop voltage gain A infinite, then the output voltage v_o and the output power emitted by the LED P_{LED} will be respectively:

$$v_o = -R_f\left[i_{PIN} + \frac{v_s}{R_8} + \frac{V_{DC}}{R_0}\right] \tag{6}$$

and

$$P_{LED} = k_{LED}\frac{v_o}{R_L} \tag{7}$$

where i_{PIN} is the photoelectric current generated by the PIN photodiode, v_s is the input signal voltage amplitude corresponding to the s_k message of the kth subscriber equipment, which has to be injected into the fiber and V_{DC} is an offset voltage.

The experimental circuit is realized with discrete components (figure 5). It represents an emitter coupled differential amplifier architecture built with transistors Q_1 and Q_2. The transistor Q_3 is mounted as a common emitter amplifier in order to assure a high open loop gain. Q_4 is working at AB class and drives the LED, which is mounted on the collector.

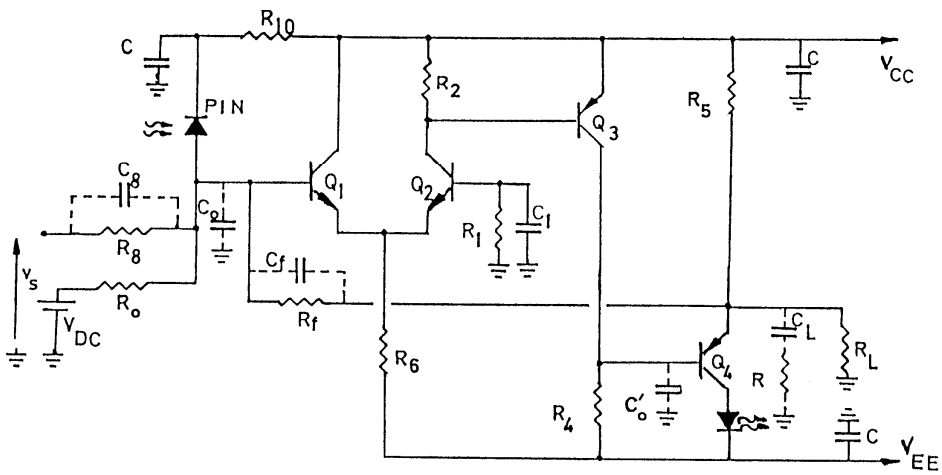

Figure 5. Drawing of the Optoelectronic Repeater Coupler Active – ORCA device, which is realized using discrete components.

The current driving the LED, i_{LED}, which is by definition equal to i_{C4}, it is composed by two components:

$$i_{LED} = i_{C4} = \frac{v_o}{R_L // R_5} + I_{DC} \tag{8}$$

The first component of the equation (8) corresponds to the current flowing through the LED because of the output voltage generated via the total input signals as defined in equation (6). It has to be noted that $R_L \ll R_5$, so the equation (8) can be simplified accordingly, neglecting the R_5 term. The second component I_{DC} is the bias current flowing through LED because of the V_{DC} power supply.

For small signal operation the output voltage $v_o(p)$, where $p=j\omega$, will be:

$$v_o(p) = Z_c(p)\left(i_{PIN} + \frac{1 + R_8 C_8 p}{R_8} v_s \right) \tag{9}$$

where the transfer impedance $Z_c(p)$ can be written like [3]:

$$Z_c(p) = \frac{Z_o(p)}{1 - \frac{Z_o(p)}{Z_f(p)}} \tag{10}$$

$Z_o(p)$ being the open loop transimpedance taking into account the loading effect of the $Z_f(p)$ and R_L:

$$Z_o(p) = -A(p)\left(Z_f \,//\, Z_i^{'}\right) \tag{11}$$

where A(p) is the open loop voltage gain of the amplifier and $Z_i^{'}$ is the amplifiers' open loop input impedance taking into account the source impedance and the feedback impedance Z_f as:

$$Z_f(p) = \frac{R_f}{1 + R_f C_f p} \tag{12}$$

Lets consider the open loop voltage gain A(p) and the input impedance Z_i of the amplifier. The equivalent Π model can be used for any transistor with:

U_T=kT/q=26mV, $g_m=I_C/U_T$, $r_b=U_T/I_B$, $\beta=I_C/I_B$

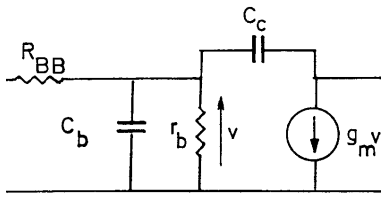

Figure 6. Equivalent Π circuit used for the analysis of the ORCA

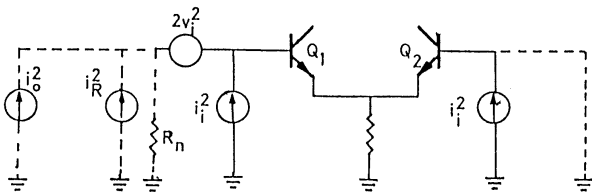

Figure 7. Noise model of the differential amplifier used for the analysis of the ORCA

$$f_T = \frac{I_C}{2\pi U_T (C_c + C_b)} \tag{13}$$

Consequently the open loop input admittance Y_i will be:

$$Y_i = \frac{1}{Z_i} = \frac{1}{2r_{b1}} + \left(\frac{C_{b1}}{2} + C_{c1}\right)p = \frac{1}{2r_{b1}} + C_i p \tag{14}$$

The open loop voltage gain A(p) is obtained from the individual gains of each stage:

$$A(p) = a_D(p) \times a_3(p) \times a_4(p) \tag{15}$$

Where for low frequencies:

$$a_D(0) \cong \frac{1}{2} g_{m2}\left(R_2 \,//\, \beta_3 \frac{U_T}{I_{C3}}\right) \tag{16}$$

with $R_2 \approx V_{BE3}/I_{C2} = V_T/I_{C2} = 0.6V/I_{C2}$.

$$a_D(0) \approx \frac{1}{2}\frac{1}{\frac{I_{C3}}{\beta_3 I_{C2}} + \frac{U_T}{V_T}} \tag{17}$$

$$a_3(0) = -g_{m3}(R_4 // R_{i4}) \approx -\frac{|V_{EE}| - V_T}{U_T} \times \frac{\beta_4 R_L}{\frac{|V_{EE}| - V_T}{I_{C3}} + \beta_4 R_L} \tag{18}$$

and,

$$a_4(0) \approx 1$$

By introducing the high frequency time constants τ_3 and τ_4 appeared respectively from the bases of Q_3 and Q_4 like:

$$\tau_3 = (R_2 // r_{b3})\{C_{c2} + C_{b3} + C_{c3}[1 - a_3(0)]\} \tag{19}$$

$$\tau_4 = (R_4 // R_{i4})(C_{c3} + gC_{c4} + C_0^{'}) \tag{20}$$

where $C_0^{'}$ is a parasitic capacitance seen from the base of Q_4, the gain g takes into account the Miller effect of the dynamic resistance and the serial resistance of the LED. If the serial resistance of the LED and of the collector are very small compared to $1/g_{m4}$, then g=2 assumption is valid. Then the open loop gain will be:

$$A(p) = \frac{A(0)}{(1 + \tau_3 p)(1 + \tau_4 p)} \tag{21}$$

and the closed loop transfer impedance of the circuit becomes:

$$Z_c(p) = \frac{A(0) R_{eff}}{1 + \frac{R_{eff}}{R_f^{'}}(\tau_3 + \tau_4 + C_t R_f^{'})p + (\tau_3 + \tau_4) C_t^{'} R_{eff} p^2} \tag{22}$$

with:

$$R_i^{'} = 2r_{b1} // R_8 // R_0 \tag{23}$$

$$R_f^{'} = R_f // R_i^{'} \tag{24}$$

$$C_t = C_i + C_T + C_0 + C_8 \tag{25}$$

$$R_{eff} = \frac{R_f}{A(0) + 1} // R_i^{'} \approx \frac{R_f}{A(0)} \tag{26}$$

$$\frac{R_{eff}}{R_f^{'}} \approx \frac{R_f + R_i^{'}}{R_i^{'} A(0)} \tag{27}$$

where C_T and C_0 are respectively the photodiodes' transition capacitance and a parasitic capacitance.

In order to obtain a stable closed loop circuit the condition

$$(\tau_3 + \tau_4) << C_t R_f' \tag{28}$$

must be satisfied. Considering $C_f << C_t$, the transfer impedance can be simplified accordingly as below:

$$Z_c(p) \approx \frac{R_f}{1 + C_t \frac{R_f}{A(0)} p + (\tau_3 + \tau_4) C_t \frac{R_f}{A(0)} p^2} \tag{29}$$

Consequently this circuit is characterized by a resonance frequency ω_0 and a damping factor ζ as:

$$\omega_0 = \sqrt{\frac{A(0)}{(\tau_3 + \tau_4) C_t R_f}} \quad \text{and} \quad \zeta = \frac{1}{2} \frac{C_t R_f}{\mathrm{A}(0)(\tau_3 + \tau_4)} \tag{30}$$

For the unconditional stability of the circuit it is desired that at high frequencies the transimpedance transfer function decrease like a first order function, meaning that the cutoff frequency at –3dB is:

$$f_{c(HF)} = \frac{A(0)}{2\pi C_t R_f} \tag{31}$$

The practical way to fulfill the condition of the equation (31) the damping factor ζ must satisfies the following rules:

$$\zeta \geq 1 \Rightarrow \frac{1}{4} \frac{C_t R_f}{A(0)(\tau_3 + \tau_4)} \geq 1 \tag{32}$$

or

$$f_{c(HF)} = \frac{A(0)}{2\pi C_t R_f} \leq \frac{1}{4} \frac{1}{2\pi(\tau_3 + \tau_4)} = \frac{1}{4} f_{34} \tag{33}$$

The bandwidth of the emitted optical flux can be limited only by the time constant τ of the light source. Related to the driving current the emitted flux is a function of the 1st. order [4] and τ the lifetime of the minority carriers, meaning the transit time in the base.

$$\Phi(p) = \frac{\Phi(0)}{1 + \tau p} \tag{34}$$

The reduction of the influence of the above-described time constant can be achieved by connecting in parallel with the load resistor R_L an equalizer network composed by a resistor r and a capacitor CL connected in series. Then the emitted flux shall be:

$$\Phi(p) = \frac{Z_c(p)}{R_L} \times \frac{1 + (R + R_L) C_L p}{1 + R C_L p} \times \frac{\Phi_o}{1 + \tau p} \times \left[i_{PIN} + v_s \left(\frac{1 + R_8 C_8 p}{R_8} \right) \right] \tag{35}$$

The compensation of the time constant τ will be possible if:

$$(R+R_L)C_L=\tau \tag{36}$$

2.3. Noise considerations

The minimum detected signal level is determined from the noise sources transferred in the input of the device. The noise sources transferred at the input of a differential amplifier are represented at figure 7.

These values are identical to the noise sources of the common emitter circuits taking into account the effect of the feedback on the noise [5]. So the noise power spectral densities are:

$$\frac{2V_i^2}{\Delta f}=8kT\left(R_{BB'}+\frac{1}{2g_m}\right) \tag{37}$$

$$\frac{i_i^2}{\Delta f}=2q\left[I_B+\frac{I_C}{\beta^2}\left(1+\frac{\beta^2 f^2}{f_T^2}\right)\right] \tag{38}$$

$$\frac{i_R^2}{\Delta f}=\frac{4\,kT}{R_n} \quad \text{where } R_n=R_f//R_{10}//R_0 \tag{39}$$

$$\frac{i_o^2}{\Delta f}=2qI_o \tag{40}$$

In a transimpedance circuit the voltage noise source v_i^2 can be neglected because $R_{eff}<<R_8//R_o$. So the noise spectral density transferred in the input will be:

$$\frac{i_n^2}{\Delta f}=2q\left[I_o+I_B+\frac{I_C}{\beta^2}\left(1+\frac{\beta^2 f^2}{f_T^2}\right)\right]+\frac{4kT}{R_n} \tag{41}$$

For a closed loop high frequency cutoff $f_{c(HF)}<f_T/\sqrt{\beta}$, the noise generated by the collector current I_C can be neglected assuming the dark current of the photodiode is very low compared to the base current of the Q_1 transistor so that $I_o<<I_B$. This means that:

$$\frac{i_n^2}{\Delta f}\approx 2qI_B+\frac{4kT}{R_n} \tag{42}$$

can be obtained.

In order to minimize $i_n^2/\Delta f$, a low base current I_B is required. This results to a high current gain β for the transistors Q_1 and Q_2. However a compromise must be done between the value of β and the time constant τ_3. By decreasing the values of the resistor R_2, consequently by increasing the current I_{C2} of Q_2 this time constant can be reduced. An important fall of the I_{C2} current will cause a reduction of the open loop gain A(0) for keeping the same close loop high frequency cutoff point and a reduction of R_f. The

reduction of R_f causes an increase of the thermal noise decreasing the value of the noise resistance R_n. R_n can be kept high by using R_8 and R_{10} of high values so that $R_n \approx R_f$. In this case it is necessary to to compensate the input signal v_s by the C_8 capacitor. The value of C_8 must be chosen so that:

$$R_8 C_8 \approx \frac{R_f}{A(0)}\left[C_t + A(0)C_f\right] \tag{43}$$

3. EXPERIMENTAL CIRCUIT REALIZATION

The circuit has been realized with descrete components. The power supply has been chosen to be low enough (±9V) in order to avoid the thermal overload of the Q_4 transistor. The R_f/R_L ratio takes into account the total link loss related to the input and driver currents. The R_f value has been chosen enough high so that its noise contribution is minimum taking into account the parasitic capacitance C_f. The output signal is monitored between the leeds of the load resistor R_L. As the signal to be transmitted is TTL format, it is inserted in the circuit through an attenuator and an R_8 resistor where $R_8 = R_f$. The resistor R_1 compensates the voltage drop due to the current I_{B1} and its value is $R_1 = R_f // R_0 // R_8$. The offset voltage V_{DC} fixes a bias current to the LED for an AB class of operation.

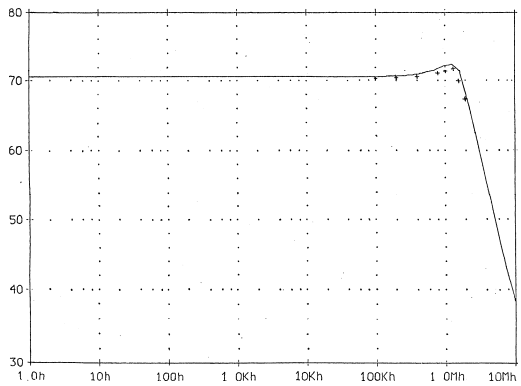

Figure 8. Frequency domain PLED/PPIN transfer function.

--------- SPICE simulation

++++++ Experimental results

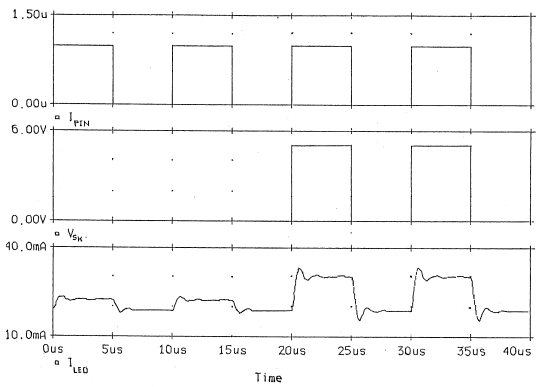

Figure 9. Time response analysis of the ORCA. The repeater and coupler functions are clearly displayed

The experimental results are in close accordance with those of the SPICE simulation (figures 8 and 9). The frequency response of the current driving the LED in respect with the photoelectric current (I_{LED}/I_{PIN}) appears like 2nd. order low pass filter. A resonance frequency ω_0 of 2MHz and a damping factor ζ of 0.25 are displayed. Despite its 3rd. order transfer function the circuit is perfectly stable.

4. CONCLUSIONS

The theoretical analysis as well as the experimental results demonstrates the ability of the circuit to operate as an analog optoelectronic repeater coupler particularly well suited for cascaded connections on a fiber optic network. The transmitted optical power is proportional to the received optical power and this relation extremely linear as the light source is included in the feedback loop. It has to be noted that the light source must be driven in a way to operate in its linear region. The mid frequencies open loop voltage gain is practically independent of the active components bias currents proportional to the negative supply voltage. The flux to flux transfer function is of the 4th. order. However the transimpedance transfer function alone is of the 2nd. order.

It must be highlighted that the circuit architecture is the most suitable for integration technologies and it goes without saying that the same design rules are valid for achieving much higher cutoff frequencies.

5. REFERENCES

[1] A. Alexandridis, E. O. Narlis, J. Boucher, Ch. Mantakas, « Développement d'un Réseau Local a Fibres Optiques et a Multiplexage de Spectre Etale», Proceedings of OPTO – 87 International Conference, pp. 46 – 48.

[2] E. O. Narlis, M. Lescure, J. Boucher, «Study of a Fiber Optic LAN with a Distributed Controller»,Fiber and Itegrated optics, Vol.10, pp. 195 – 204.

[3] M. H. El-Diwani, J. Roulston, S. G. Chamberlain, «Design of Low Noise Bipolar Transimpedance Preamplifiers for Optical Receivers», IEE Proceedings, Vol.128, Pt. G., No.6, pp. 299 – 305.

[4] J. Wilson, J. F. B. Hawkes, *«Optoelectronics»,* Prentice Hall, New York - 1989

[5] P. R. Gray, R. G. Meyer, *«Analysis and Design of Analog Integrated Circuits»,* John Willey, New york – 1984