NONMINIMAL REALISATION OF COMMON-GROUND *RLC* NETWORKS

D. Kandic* and B. Relji**

*Department of Electronics & Electrical Eng., Mechanical Eng. Faculty,
University of Belgrade, Belgrade, Yugoslavia;
e-mail: dbkandic@afrodita.rcub.bg.ac.yu

** Faculty of Electrical Engg., University of Belgrade, Yugoslavia;
e-mail: reljinb@etf.bg.ac.yu

Abstract

In the paper a new theorem is presented establishing a set of sufficient conditions for (non) minimal realisation of any stable, square, matrix of real rational functions in complex frequency, as admittance matrix of passive, transformerless, common-ground RC network, having (non) minimal number of capacitors. The obtained result is produced by using Howitt linear transformation and can readily be applied to admittance matrix synthesis of other types of two-element-kind RLC networks, owing to the possibility of converting their synthesis problems to similar ones for the pertinent RC network prototypes.

1. INTRODUCTION

During the last few decades many papers have appeared dealing with minimal, common-ground, transformerless, multiport synthesis of active and passive networks, and by now, a broad class of various realisation procedures has been proposed. Many efforts were made in trying to formulate a set of *necessary and sufficient* conditions for general network synthesis problem, for which it was believed to have solution that resembles and is based on the well-known set of the necessary and sufficient conditions for immitance functions of *RLC* networks. Unfortunately, the complete solution to the last general problem has not been accomplished yet. To that purpose, there were made recently several successful attempts aiming at finding at least one analytic set of necessary and sufficient conditions for the *minimal* realisation of admittance matrices of passive, transformerless, two-element-kind, common-ground multiport networks [1-6]. In this paper we shall present a new theorem establishing a set of *sufficient* conditions for (non) minimal synthesis of any admittance matrix of real, rational functions in complex frequency s by a passive, common -ground, transformerless, *RC* network, having (non) minimal number of capacitors. The synthesis of other two-element-kind *RLC* networks is always convertible to synthesis problem of convenient *RC* network prototypes. The main result of paper is presented by Theorem 3. An illustrative numerical example provides an outline of the realisation procedure proposed. At the outset we shall give some necessary definitions (Definitions 1-3) and a property (Property 1).

- Definition 1**:** An electrical network is *C-connected* if it does not have isolated and/or purely capacitive loaded nodes [3, 4].

- Definition 2**:** If $\boldsymbol{Y}(s)$ is any matrix of real, rational functions in complex frequency s, having order n and being holomorfic at infinity ($s \to \infty$), then its system realisation, $S_\delta = \langle \boldsymbol{A}, \boldsymbol{B}, \boldsymbol{C}, \boldsymbol{D} \rangle$ having dimension δ is any conform quadruple of real matrices $\boldsymbol{A}$, $\boldsymbol{B}$, $\boldsymbol{C}$ and $\boldsymbol{D}$ that satisfy the following condition, $\boldsymbol{Y}(s)=\boldsymbol{D}+\boldsymbol{C}\cdot(s\cdot\boldsymbol{U}_\delta - \boldsymbol{A})^{-1}\cdot\boldsymbol{B}$, wherein $\boldsymbol{U}_\delta$ is a unity matrix of order δ. If δ is minimum possible, then the realisation is said to be minimal of order $\mu=\min(\delta)$; otherwise, the realisation will be said to be nonminimal having the order δ ($\delta > \mu$).

- Definition 3**:** For conform pair of real matrices ($\boldsymbol{A}$, $\boldsymbol{B}$) it will be said to establish a *H-pair* if there exists at least one real, orthogonal matrix $\boldsymbol{Q}$ of order δ, which provides hyperdominant† sign-pattern of matrix $-\boldsymbol{Q}^{\mathrm{T}}\cdot\boldsymbol{A}\cdot\boldsymbol{Q}$ and nonnegativity of matrix $\mathbf{B}^{\mathrm{T}}\cdot\boldsymbol{Q}$. *H-parity* of matrices $\boldsymbol{A}$ and $\boldsymbol{B}$ we shall denote by H($\boldsymbol{A}$, $\boldsymbol{B}$) and for matrix $\boldsymbol{Q}$ (which is always determined through an appropriate algorithm) it will be said to uncover the solution of the pertinent *H-problem* of order $\delta \geq \mu$.

- Property 1**:** The admittance matrix of any *RC* network (not necessarily common-ground and transformerless), can always be expressed in the second Foster's form

$$\boldsymbol{Y}(s) = s\cdot\boldsymbol{A}_\infty + \sum_{i=0}^{\delta} \frac{s\cdot\boldsymbol{A}_{\mathrm{i}}}{s+s_{\mathrm{i}}}; \quad (s_0=0,\ 0 < s_1 < s_2 < \ \ldots\ < s_\delta).(1)$$

For the admittance matrix of any common-ground, transformerless *RC* network (*CGRCT*0) it is necessary that for every $\sigma \in [0, \infty)$ the matrix $\boldsymbol{Y}(\sigma)$ be hyperdominant *. There from, it follows that both matrices $\boldsymbol{A}_0$ and $\boldsymbol{A}_\infty$ must be hyperdominant [1, 7]. Now, we shall give the main result of paper, which is formulated as Theorem 3.

2. THE MAIN RESULT

Let S_δ ($\delta \geq \mu$) (Definition 1) be a (non) minimal system realisation of admittance matrix $\boldsymbol{Y}(s)-s\cdot\boldsymbol{A}_\infty$ (Property 1). Suppose that N_δ is some (n+δ)–port electrical network, possibly of

† A real, square matrix is said to be hyperdominant if all its diagonal entries are nonnegative, off-diagonal entries are nonpositive and the sum of each row and/or column entries are nonnegative [1-4,7]

the *CGRCT*0 type, having (n+δ+1) *external* nodes [provided that the (n+δ+1)–st is reference], whose overall admittance matrix must read:

$$\boldsymbol{Y}_\delta = \boldsymbol{G}_\delta + s\cdot\boldsymbol{C}_\delta \equiv \left[\begin{array}{c|c} \boldsymbol{D} & -\boldsymbol{B}^{\mathrm{T}} \\ \hline -\boldsymbol{B} & -\boldsymbol{A} \end{array}\right] + \left[\begin{array}{c|c} \boldsymbol{A}_\infty & \boldsymbol{0}_{n,\delta} \\ \hline \boldsymbol{0}_{n,\delta}^{\mathrm{T}} & \boldsymbol{U}_\delta \end{array}\right]\cdot s \,, \quad (2)$$

wherein is assumed that relation $\boldsymbol{B} = -\boldsymbol{C}^{\mathrm{T}}$ holds by virtue of *reciprocity* of multiport *CGRCT*0 network [2-4]. Now, one can easily prove the following:

- Theorem 1**:** Let N_δ is the (n+δ)–port, *CGRCT*0 network, having the admittance matrix $\boldsymbol{Y}_\delta$ given by (2). Let N_δ^* be the n–port, CGRCT0 network generated from N_δ by *open-circuiting* its ports (n+1), ... , (n+δ). Then the admittance matrix of network N_δ^* is equal to $\boldsymbol{Y}(s)$.

  Proof**:** It is straightforward and is left to reader.

Since both matrices $\boldsymbol{G}_\delta$ and $\boldsymbol{C}_\delta$, in general case, are not hyperdominant, then the matrix $\boldsymbol{Y}_\delta$ can not be realised by a *CGRCT*0 network. In endeavouring to achieve this last goal, we shall apply the Howitt linear transformation to matrix $\boldsymbol{Y}_\delta$, producing therewith the admittance matrix

$$\boldsymbol{Y}_\delta^* = \boldsymbol{G}_\delta^* + s\cdot\boldsymbol{C}_\delta^* = \left[\begin{array}{c|c} \boldsymbol{U}_n & \boldsymbol{0}_{n,\delta} \\ \hline -\boldsymbol{L} & \boldsymbol{V} \end{array}\right]^{\mathrm{T}} \cdot \boldsymbol{Y}_\delta \cdot \left[\begin{array}{c|c} \boldsymbol{U}_n & \boldsymbol{0}_{n,\delta} \\ \hline -\boldsymbol{L} & \boldsymbol{V} \end{array}\right] \quad (3)$$

wherein by now $\boldsymbol{V}$ is an arbitrarily assumed real, regular matrix of order δ and $\boldsymbol{L}$ is an arbitrary δ × n real matrix. Let we denote with $\mathrm{N}_{\delta\mathrm{H}}^*$ the network which is to realise the admittance matrix $\boldsymbol{Y}_\delta^*$. Since, in general, the *degrees of matrices* $\boldsymbol{Y}_\delta$ and $\boldsymbol{Y}_\delta^*$ are different [8], then networks N_δ and $\mathrm{N}_{\delta\mathrm{H}}^*$ must have different number of capacitors. Furthermore, application of Howitt transformation does not enable generation of complete set of equivalent realisations for the class of lossy network structures [8]. Bearing this in mind we make for the fact that the main theorem will provide only a set of *sufficient* conditions for *CGRCT*0 networks. From (2) and (3), for s=0, we identify the following *network realisation* matrices:

$$\boldsymbol{G}_{\delta}^{*} = \left[\begin{array}{c|c} \boldsymbol{A}_0 - (\boldsymbol{B} - \boldsymbol{A}\cdot\boldsymbol{L})^{\mathrm{T}}\cdot\boldsymbol{A}^{-1}\cdot(\boldsymbol{B} - \boldsymbol{A}\cdot\boldsymbol{L}) & -(\boldsymbol{B} - \boldsymbol{A}\cdot\boldsymbol{L})^{\mathrm{T}}\cdot\boldsymbol{V} \\ \hline -\boldsymbol{V}^{\mathrm{T}}\cdot(\boldsymbol{B} - \boldsymbol{A}\cdot\boldsymbol{L}) & -\boldsymbol{V}^{\mathrm{T}}\cdot\boldsymbol{A}\cdot\boldsymbol{V} \end{array}\right] \tag{4}$$

$$\boldsymbol{C}_{\delta}^{*} = \left[\begin{array}{c|c} \boldsymbol{A}_{\infty} + \boldsymbol{L}^{\mathrm{T}}\cdot\boldsymbol{L} & -\boldsymbol{L}^{\mathrm{T}}\cdot\boldsymbol{V} \\ \hline -\boldsymbol{V}^{\mathrm{T}}\cdot\boldsymbol{L} & \boldsymbol{V}^{\mathrm{T}}\cdot\boldsymbol{V} \end{array}\right]$$

Now, owing to the following fact relating to the inversion of *regular* lower triangular matrix [9]:

$$\left[\begin{array}{c|c} \boldsymbol{U}_n & \boldsymbol{0}_{n,\delta} \\ \hline -\boldsymbol{L} & \boldsymbol{V} \end{array}\right]^{-1} = \left[\begin{array}{c|c} \boldsymbol{U}_n & \boldsymbol{0}_{n,\delta} \\ \hline \boldsymbol{V}^{-1}\cdot\boldsymbol{L} & \boldsymbol{V}^{-1} \end{array}\right] \tag{5}$$

we can prove the following theorem.

- Theorem 2**:** Let $N_{\delta H}^{*}$ is a (n+δ)-port *CGRCT*0 network having the admittance matrix represented by equations (3) and (4). Let $N_{\delta H}^{**}$ be the n-port *CGRCT*0 network generated by open-circuiting (and thus eliminating=impressing) nodes of the last δ ports of network $N_{\delta H}^{*}$. Then *both* networks $N_{\delta H}^{**}$ *and* N_{δ}^{*} realise the same admittance matrix $\boldsymbol{Y}(s)$.

  Proof: It is straightforward and is left to the reader.

- Theorem 3**:** Let the admittance matrix, $\overline{\boldsymbol{Y}}(s) = \boldsymbol{Y}(s) - s\cdot\boldsymbol{A}_{\infty}$ of order n be holomorfic at infinity and let the set of all its system (non) minimal realisations is, $S_{\delta}=\langle\boldsymbol{A}, \boldsymbol{B}, \boldsymbol{C}, \boldsymbol{D}\rangle$, having dimension $\delta \geq \mu$ [μ–order of system minimal realisation of $\boldsymbol{Y}(s)$]. Sufficient conditions for realisation of $\boldsymbol{Y}(s)$ by a passive, C–connected, *CGRCT*0 network *without the internal nodes* are:

(i) $\boldsymbol{Y}(s)$ is a matrix of real, rational functions in complex frequency $s=\sigma+j\omega$ ($j=\sqrt{-1}$), whose all diagonal entries are the input admittances of passive *RC* networks.

(ii) $\boldsymbol{Y}(s)$ has only simple poles on negative part of real axis. At origin $\boldsymbol{Y}(s)$ must not have pole.

(iii) Residuals at poles of $\boldsymbol{Y}(s)/s$ are real, symmetric and positive definite, or positive semidefinite matrices and $\mathrm{Re}\{\boldsymbol{Y}(\mathrm{j}\omega)\}$ is symmetric, positive definite, or positive semidefinite matrix.

(iv) Matrices $\boldsymbol{Y}(0)$ and $\boldsymbol{A}_\infty$ are both symmetric and *hyperdominant*, whereas the matrix $\overline{\boldsymbol{Y}}(\infty)$ must be symmetric and *strictly hyperdominant*.

(v) The overall passive realisation network has not less than $n+\mathrm{rank}\{\boldsymbol{B}\}$ accessible, internal nodes, loaded both capacitive and resistively.

(vi) There exists $\delta \times n$ $[\delta \geq \max(2n+1, \mu)]$ conform matrix $\boldsymbol{F}$ having orthonormal columns, which satisfy the conditions: (1) $\boldsymbol{B}^{\mathrm{T}}\cdot\boldsymbol{F}=\boldsymbol{0}_{n,n}$ and (2) matrix $-\boldsymbol{F}^{\mathrm{T}}\cdot\boldsymbol{A}\cdot\boldsymbol{F}$ has hyperdominant sign-pattern.

(vii) There exists at least one diagonal matrix $\boldsymbol{\Delta}$ with positive diagonal entries such that substitution of $\boldsymbol{L}=\boldsymbol{F}\cdot\boldsymbol{\Delta}$ into matrices $\boldsymbol{A}_0-(\boldsymbol{B}-\boldsymbol{A}\cdot\boldsymbol{L})^{\mathrm{T}}\boldsymbol{A}^{-1}(\boldsymbol{B}-\boldsymbol{A}\cdot\boldsymbol{L})$ and $\boldsymbol{A}_\infty+\boldsymbol{L}^{\mathrm{T}}\cdot\boldsymbol{L}$ produces these matrices as strictly hyperdominant.

(viii) Matrices $\boldsymbol{A}$ and $\left[(\boldsymbol{B}-\boldsymbol{A}\cdot\boldsymbol{L}) \mid \boldsymbol{L} \mid -\boldsymbol{B}\cdot\boldsymbol{u}\right]$ establish a H-pair, wherein $\mathbf{u}$ is n-dimensional column vector whose entries are equal to unity.

Proof: Conditions (i)–(iii) represent the well-known general necessary and sufficient conditions for admittance matrices of *RC* networks [8]. They are also sufficient for calculation of infinitely many algebraically equivalent realisations S_δ of order $\delta \geq \mu$ [3]. It is evident that condition (iv) is both necessary and sufficient for C–connected CGRCT0 networks and is being used in developing of algorithms for synthesis of pure resistive and capacitive common-ground, transformerless multiport networks [1, 2], which rely on solution of inverse eigenvalue problem of real, symmetric, hyperdominant matrices [2, 7]. The sufficiency of conditions (v)–(viii) can be justified through formulation of a constructive proof, i. e. the steps of the appropriate algorithm, which assures the existence of at least one realisation network. In the sequel, we shall not give detailed explanation of the algorithm proposed, but instead we shall rather describe its main steps and ideas behind. Algorithm has three main phases (i. e. groups of steps) (α), (β) and (γ).

(α) Here we construct the matrix $\boldsymbol{L}$. If rows of symmetric matrix $\overline{\boldsymbol{Y}}(\infty) = \boldsymbol{A}_0 - \boldsymbol{B}^{\mathrm{T}} \cdot \boldsymbol{A}^{-1} \cdot \boldsymbol{B}$ are strictly hyperdominant and/or exist zero-hyperdominant rows for which columns of $\boldsymbol{B}$ with the same numbers are columns of zeros, then we *can assume*

$\boldsymbol{L}=\mathbf{0}_{\delta,\,n}$. Let we now write $\boldsymbol{V}=\boldsymbol{Q}\cdot\boldsymbol{K}^{1/2}$ ($\boldsymbol{Q}$ –orthogonal matrix of order δ and $\mathbf{K}^{1/2}$ – positive definite diagonal matrix). Then from (4) we obtain the following expressions for conductance and capacitance matrices, which for *CGRCT*0 networks both must be, *hyperdominant*:

$$\mathbf{G}_\delta^{\,*}=\left[\begin{array}{c|c}\overline{\boldsymbol{Y}}(\infty) & -\boldsymbol{B}^{\mathrm{T}}\cdot\boldsymbol{Q}\cdot\boldsymbol{K}^{1/2}\\ \hline -\boldsymbol{K}^{1/2}\cdot\boldsymbol{Q}^{\mathrm{T}}\cdot\boldsymbol{B} & -\boldsymbol{K}^{1/2}\cdot\boldsymbol{Q}^{\mathrm{T}}\cdot\boldsymbol{A}\cdot\boldsymbol{Q}\cdot\boldsymbol{K}^{1/2}\end{array}\right],\ \mathbf{C}_\delta^{\,*}=\left[\begin{array}{c|c}\boldsymbol{A}_\infty & \mathbf{0}_{n,\delta}\\ \hline \mathbf{0}_{n,\delta}^{\mathrm{T}} & \boldsymbol{K}\end{array}\right] \tag{6}$$

Demand for hyperdominancy of $\boldsymbol{G}_\delta^{\,*}$ can be completely fulfilled by using the algorithm already proposed in [3]. The obtained form of capacitance matrix suggests that the capacitors are connected between the nodes labelled with 1, 2, ... , n and/or the reference node and that the same holds for nodes labelled with n+1, n+2, ... , (n+δ), whereas between any pair of nodes in these groups there does not exist any capacitate connection. From now on it will be supposed that symmetric matrix $\overline{\boldsymbol{Y}}(\infty)$ is strictly hyperdominant. Subset of algebraically equivalent, non- minimal network realisations of $\boldsymbol{Y}(s)$ for which $\boldsymbol{L}\neq\mathbf{0}_{\mathrm{n},\,\delta}$ is established through the following sequence of steps.

(1^0) Select any system realisation S_δ of n–th order matrix

$\overline{\boldsymbol{Y}}(s)$ having dimension $\delta\geq\max(2n+1,\,\mu)>n+\mathrm{rank}\{\boldsymbol{B}\}$.

(2^0) Form $\delta\times n$ matrix $\boldsymbol{L}=\boldsymbol{F}\cdot\boldsymbol{\Delta}$, wherein it is: $\boldsymbol{\Delta}$ – positive definite n–th order diagonal matrix and $\boldsymbol{F}$ – $\delta\times n$ matrix having orthonormal columns, satisfying the condition $\boldsymbol{B}^{\mathrm{T}}\cdot\boldsymbol{F}=\mathbf{0}_{n,n}$, and producing $-\boldsymbol{F}^{\mathrm{T}}\cdot\boldsymbol{A}\cdot\boldsymbol{F}$ with hyperdominant sign-pattern. Exact proof of the last claim comes out of the extent of our consideration and relies on fact that the columns of $\delta\times n$ matrix $\boldsymbol{B}$ can always be represented by a linear combination of rank{$\boldsymbol{B}$} arbitrary orthonormal, δ–dimensional column-vectors. The set of [δ–rank{$\boldsymbol{B}$}] orthonormal, δ–dimensional column-vectors, which complement the previous orthonormal set to orthogonal matrix, establish the sought matrix $\boldsymbol{F}$ satisfying the condition $\mathbf{B}^{\mathrm{T}}\cdot\mathbf{F}=\mathbf{0}_{n,n}$. Hyperdominant sign-pattern of $-\boldsymbol{F}^{\mathrm{T}}\cdot\boldsymbol{A}\cdot\boldsymbol{F}$ is to be achieved in finite number of steps by use of algorithms [2, 3]. Since, $\boldsymbol{A}_0-(\boldsymbol{B}-\boldsymbol{A}\cdot\boldsymbol{L})^{\mathrm{T}}\cdot\boldsymbol{A}^{-1}\cdot(\boldsymbol{B}-\boldsymbol{A}\cdot\boldsymbol{L})=\overline{\boldsymbol{Y}}(\infty)+\Delta\cdot(-\boldsymbol{F}^{\mathrm{T}}\cdot\boldsymbol{A}\cdot\boldsymbol{F})\cdot\Delta$, then the positive diagonal entries of diagonal matrix $\boldsymbol{\Delta}$ can always be determined so as to provide arbitrarily large hyperdominancy margin for the previous symmetric matrix. Since we have $\boldsymbol{L}^{\mathrm{T}}\cdot\boldsymbol{L}=\boldsymbol{\Delta}^2$, then (1,1) block in matrix $\boldsymbol{C}_\delta^{\,*}$ is strictly hyperdominant. Let we now

define the column-vectors, $\boldsymbol{a}=(\boldsymbol{B}-\boldsymbol{A}\cdot\boldsymbol{L})\cdot\boldsymbol{u}$ and $\boldsymbol{b}=\boldsymbol{B}\cdot\boldsymbol{u}$,where $\boldsymbol{u}$ is δ-dimensional column-vector of unites.

(β) In this phase we take $\boldsymbol{V}=\boldsymbol{Q}\cdot\boldsymbol{K}^{1/2}$ and construct the orthogonal, δ–dimensional matrix $\boldsymbol{Q}$ through finite-step iteration procedure so as to provide hyperdominant sign-pattern of both matrices $\boldsymbol{G}_\delta^*$ and $\boldsymbol{C}_\delta^*$ [2, 3].

(γ) In this phase we determine the diagonal matrix $\boldsymbol{K}$ so that both $\boldsymbol{G}_\delta^*$ and $\boldsymbol{C}_\delta^*$ are hyperdominant. The sought $\boldsymbol{K}$ must simultaneously satisfy the following two conditions:

$$\mathrm{col}(\boldsymbol{K}^{1/2})=-\boldsymbol{Q}^{\mathrm{T}}\cdot\boldsymbol{A}^{-1}\cdot\boldsymbol{Q}\cdot\alpha_{\mathrm{G}}\cdot\boldsymbol{Q}^{\mathrm{T}}\cdot\boldsymbol{a},\ \ \mathrm{col}(\boldsymbol{K}^{1/2})=-\alpha_{\mathrm{C}}\cdot\boldsymbol{Q}^{\mathrm{T}}\cdot\boldsymbol{L}\cdot\boldsymbol{u},\quad(7)$$

where α_{G} and α_{C} are δ–th order diagonal matrices of entries being not less than unity. If we assume $\alpha_{\mathrm{C}}=\boldsymbol{U}_\delta$, then the hiperdominancy margin of the last δ columns (rows) of $\boldsymbol{C}_\delta^*$ will be equal to zero and in the realisation network there will not be present capacitors connecting δ–group of nodes to the reference (common-ground). Then, by using (7) we finally obtain:

$$\begin{gathered}\mathrm{col}(\alpha_{\mathrm{G}})=\mathrm{col}(\boldsymbol{U}_\delta)-[\mathrm{diag}(\boldsymbol{Q}^{\mathrm{T}}\cdot\boldsymbol{a})]^{-1}\cdot\boldsymbol{Q}^{\mathrm{T}}\cdot\boldsymbol{b},\\ \boldsymbol{K}=[\mathrm{diag}(\boldsymbol{Q}^{\mathrm{T}}\cdot\boldsymbol{F}\cdot\Delta\cdot\boldsymbol{u})]^2,\end{gathered}\quad(8)$$

ascertaining herewith existence of linear Howitt transformation which provides hyperdominancy of both matrices $\boldsymbol{G}_\delta^*$ and $\boldsymbol{C}_\delta^*$ and their network realisation. This completes the outline of proof of the stated new theorem.

3. A NUMERICAL EXAMPLE

We shall realise the admittance matrix $\boldsymbol{Y}(s)$, given in [1], by *CGRCT*0 network with δ=5 nodes (3 of them are internal nodes):

$$\boldsymbol{Y}=\begin{bmatrix}2 & -2\\ -2 & 2\end{bmatrix}s+\begin{bmatrix}9 & -8\\ -8 & 9\end{bmatrix}+\begin{bmatrix}9 & 3\\ 3 & 1\end{bmatrix}\frac{s}{s+1}+\begin{bmatrix}2 & 4\\ 4 & 8\end{bmatrix}\frac{s}{s+2}.\quad(9)$$

A nonminimal realisation $S_\delta=\langle \boldsymbol{A}, \boldsymbol{B}, \boldsymbol{C}, \boldsymbol{D}\rangle$ of $\overline{\boldsymbol{Y}}(s)$ reads:

$$\boldsymbol{A}=\begin{bmatrix} -1 & 0 & 0 \\ 0 & -1 & 0 \\ 0 & 0 & -2 \end{bmatrix},\ \boldsymbol{B}=-\boldsymbol{C}^{\mathrm{T}}=\begin{bmatrix} 3\sqrt{3}/2 & \sqrt{3}/2 \\ 3/2 & 1/2 \\ 2 & 4 \end{bmatrix} \text{ and } \boldsymbol{D}=\boldsymbol{Y}(\infty)=\begin{bmatrix} 20 & -1 \\ -1 & 20 \end{bmatrix}. \quad (10)$$

An "orthogonal transformer" [2, 3] is found to be $\boldsymbol{Q}=\begin{bmatrix} 0.000 & 0.107 & 0.994 \\ 1.000 & 0.000 & 0.000 \\ 0.000 & 0.994 & -0.107 \end{bmatrix}$ and the only three capacitances connected between the internal nodes labelled by 3, 4 and 5 and ground are respectively given in real parametric form with maximum possible number degrees of freedom [$k_i \geq 0$ (i=1,2,3,4); $k_1+k_2+k_3+k_4 > 0$]:

$$C_1=4\cdot\left(1.000+\frac{k_2}{k_1+3.000k_2+6.800k_3+6.900k_4}\right)^2$$

$$C_2=4\cdot\left(3.348+\frac{3.200k_3+0.148k_4}{k_1+3.000k_2+6.800k_3+6.900k_4}\right)^2 \quad (11)$$

$$C_3=4\cdot\left(3.082+\frac{0.335k_3+2.747k_4}{k_1+3.000k_2+6.800k_3+6.900k_4}\right)^2.$$

If we assume, $k_2=k_3=k_4=0$ and $k_1 > 0$, then we obtain $\boldsymbol{G}_5$ and $\boldsymbol{C}_5$ in the form which enables immediate network realisation:

$$\boldsymbol{G}_5=\begin{bmatrix} 20.00 & -1.00 & -3.00 & -7.59 & -7.29 \\ -1.00 & 18.00 & -1.00 & -13.62 & -1.32 \\ -3.00 & -1.00 & 4.00 & 0.00 & 0.00 \\ -7.59 & -13.62 & 0.00 & 22.31 & -1.10 \\ -7.29 & -1.32 & 0.00 & -1.10 & 9.72 \end{bmatrix}, \boldsymbol{C}_5=\begin{bmatrix} 2 & -2 & 0 & 0 & 0 \\ -2 & 2 & 0 & 0 & 0 \\ 0 & 0 & 4.00 & 0 & 0 \\ 0 & 0 & 0 & 11.21 & 0 \\ 0 & 0 & 0 & 0 & 9.49 \end{bmatrix}.$$

In the overall network realisation (Fig. 1) are denoted values of *RC* parameters, normalised both in frequency and impedance level and hence are pure numbers.

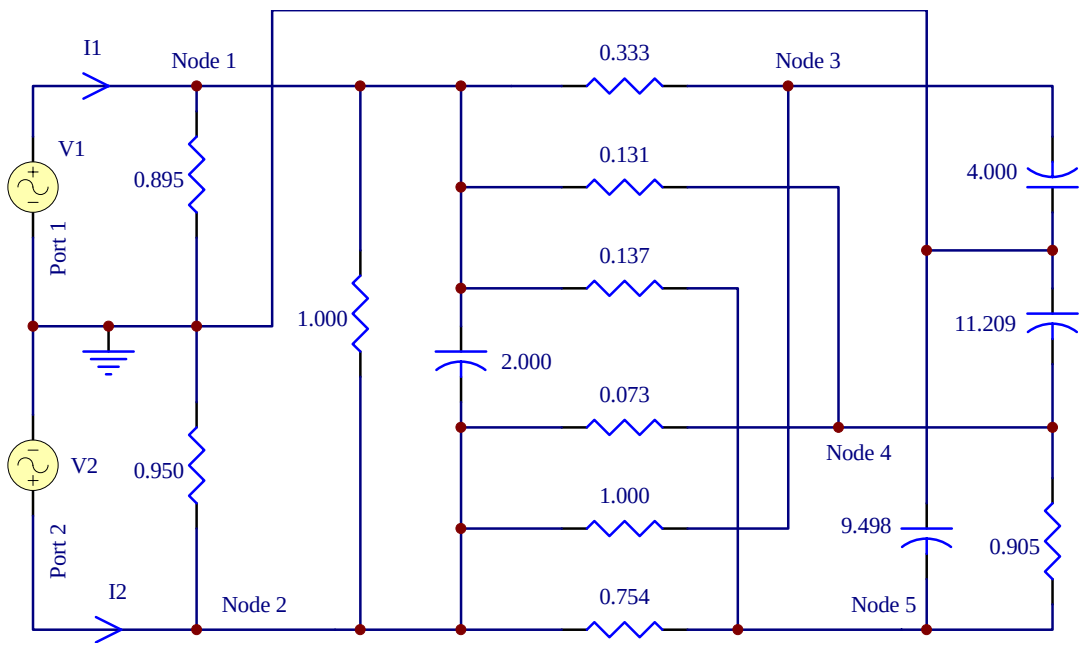

Figure. 1

REFERENCES

[1] Matsumoto N., "RC admittance matrix realisation by linear transformation", *IEEE Transactions on CAS*, CAS-29, 1982, pp. 663-673.

[2] Kandic B., Reljin B., "A class of non canonic driving-point immitance realisations of passive, common-ground, transformerless, two-element-kind RLC networks", *International Journal of Circuit Theory and Applications*, Wiley, Vol. 22, No. 3, 1994, pp. 163-174.

[3] Kandic D., Reljin B., "New results of transformerless synthesis of admittance matrices of passive, common-ground, two-element-kind RLC networks",

International Journal of Theoretical Electrotechnics (joint to ISTET), No. 5, 1994, pp. 61-68.

[4] Kandic D., Reljin B., "Non canonic driving-point immitance synthesis of passive, common-ground, transformerless, two-element-kind RLC networks", *Proceedings of the 8th International Symposium on Theoretical Electrical Engineering*, Aristotle University, Thessaloniki, Greece, 1995, pp. 21-24.

[5] Kandic D., Reljin B., "Generalisation of the multiport network synthesis problem", *Proceedings of the 9th International Symposium on Theoretical Electrical Engineering*, Palermo, Italy, 1997, pp. 392-395.

[6] Kandic D., Reljin B., "Generalisation of the multiport network synthesis problem and its solu- tion", *Proceedings of the 7th European Conferen- ce on Circuit Theory and Design ECCTD'97*, Budapest, Hungary, 1997, pp. 425-429.

[7] Kandic D., Parlett B., Reljin B.,Vasic P., "Explicit construction of hyperdominant symmetric matrices with assigned spectrum", *Linear Algebra and its Applications*, Elsevir, Vol. 258, 1997, pp. 41-51.

[8] Anderson B. D. O., Vongpanitlerd S., *Network analysis and Synthesis – a modern system theory approach*, Prentice–Hall Inc., New York, 1973.

[9] Noble B., James W. D., *Applied Linear Algebra*, Prentice–Hall Inc., New York, 1977.