OPTOELECTRONIC REPEATER – COUPLER WITH OPTICAL FEEDBACK FOR FIBER OPTIC AVIONICS DATA BUSES

E. O. Narlis

Hellenic Aerospace Industry
P.O. Box 23, GR-32009, Schimatari, Greece
Email: narlis.aithon@haicorp.com

Abstract

Optically – coupled feedback substituting the conventional feedback resistor has a number of advantages including a) elimination of the feedback resistors Johnson noise for higher sensitivity, b) elimination of feedback capacitance for higher bandwidth, and c) capability of large feedback current with low output voltage for wide dynamic range. In this paper the fiber optic feedback is presented as an improvement method for a conventional trans-impedance optoelectronic repeater – coupler active device for fiber optic networks, this last having been recently reported [1].

1. INTRODUCTION

Although there has been considerable improvement in receivers for very high bit rate optical transmission systems, little attention has been given for receivers applied in local lightwave transmission and subscriber loop applications [2, 3, 4]. Furthermore the growing interest in networks with non-conventional topologies and rooting techniques, and specifically in fiber optic avionics data buses (i.e. MILBUS – 1773), makes very desirable specialized units such as high performance repeater - active couplers [1]. Optical feedback has been extensively reported as an alternate configuration for transimpedance amplifiers offering higher sensitivity and dynamic range [6 – 10]. In this extend the present paper will discuss the analogy between a conventional repeater active coupler and the optically fed-back unit, analyzing the advantages of the optical feedback for repeater – coupler circuits.

2. DESIGN OF AN OPTICALLY FED-BACK REPEATER – COUPLER

2.1. EQUIVALENCE BETWEEN THE CONVENTIONAL REPEATER-COUPLER AND THE OPTICALLY FED BACK UNIT.

The repeater - coupler (either conventional or optically fed-back) consists essentially by a vide band amplifier and summation circuit configuration (Fig.1, 2). The conventional repeater coupler has been extensively reported in [1].

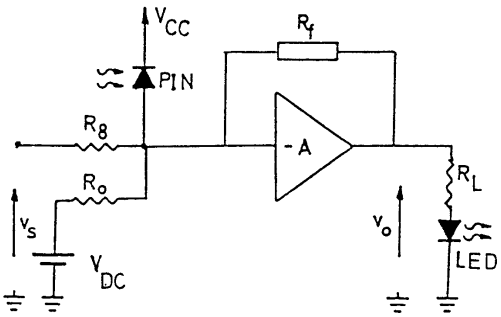

Figure 1. Simplified functional diagram of the conventional ORCA

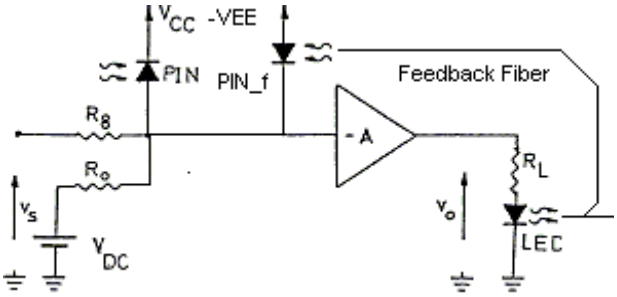

Figure 2. Simplified functional diagram of the optically fed-back ORCA

Specifically for the repeater function, the power-to-power relation can be written as:

$$\left(\frac{P_{LED}}{P_{PIN}}\right)_{rep} = k_{PIN} k_{LED} \left(\frac{I_{LED}}{I_{PIN}}\right)_{rep} \tag{1}$$

Considering that the current driving the LED:

$$I_{LED} = \frac{v_0}{R_L} \tag{2}$$

Substituting the expression (2) into (1) the repeater function can be written in terms of the closed loop transimpedance gain $Z_f = v_0/I_{PIN}$:

$$\left(\frac{P_{LED}}{P_{PIN}}\right)_{rep} = \frac{k_{PIN} k_{LED}}{R_L} \left(\frac{v_0}{I_{PIN}}\right) = Z_f \frac{k_{PIN} k_{LED}}{R_L} \tag{3}$$

where P_{LED} is the output power of the light emitting diode, P_{PIN} is the power arriving on the photodiode's surface, k_{PIN} and k_{LED} are respectively the responsivity (mA/mW) of the photodiode and the average (mW/mA) of the LED, I_{PIN} is the current generated by the photodiode of the repeater.

For a transimpedance amplifier the closed loop transimpedance gain is:

$$Z_f = \frac{Z_o}{1 + AB} \tag{4}$$

where B is the feedback transfer loop $B = \frac{I_f}{v_0}$ and Z_0 the open loop transimpedance transfer function.

For a conventionally (resistance) fed-back repeater $B=1/R_f$. Considering the optical feedback, then $B \approx B_{opt}$ can be expressed as following:

$$B_{opt} = \frac{I_{PIN_f}}{v_0} \tag{5}$$

where I_{PIN_f} is the feedback current generated by the second PIN photodiode, which receives a portion of the emitted optical power as optical feedback. Considering both photodiodes identical the feedback current can be expressed as a function of the power emitted by the LED, P_{LED}, the total optical path loss L_{opt} (including the total fiber to LED and fiber to feedback PIN losses), and k_{PIN}:

$$I_{PIN_f} = P_{LED} L_{opt} k_{PIN} \tag{6}$$

Substituting (2) into (6) and considering that $P_{LED}=k_{LED}I_{LED}$:

$$I_{PIN_f} = v_0 \frac{k_{PIN} k_{LED} L_{opt}}{R_L} = v_0 \frac{K_{opt}}{R_L} \tag{7}$$

where K_{opt} is the optical feedback coupling factor, is obtained. The expression (7) leads to the conclusion that the optical feedback $B_{opt} = \frac{K_{opt}}{R_L}$ could be expressed in terms of a virtual feedback resistance:

$$R_{f_eq} = \frac{R_L}{K_{opt}} \tag{8}$$

The experimental circuits are realized with discrete components (Fig. 3, 4). Both represent an emitter coupled differential amplifier architecture built with transistors Q_1 and Q_2. The transistor Q_3 is mounted as a common emitter amplifier in order to

assure a high open loop gain. Q_4 is working at AB class and drives the LED, which is mounted on the collector.

The current driving the LED, i_{LED}, is by definition equal to i_{C4} and it is composed by two components:

$$i_{LED} = i_{C4} = \frac{v_o}{R_L // R_5} + I_{DC} \tag{9}$$

The first component of the equation (9) corresponds to the current flowing through the LED because of the output voltage generated via the total input signals I_{PIN} for the repeater function and v_s for the coupler function. It has to be noted that $R_L << R_5$, so the equation (8) can be simplified accordingly, neglecting the R_5 term. The second component I_{DC} is the bias current flowing through LED because of the V_{DC} power supply.

For small signal operation the output voltage $v_o(p)$, where $p=j\omega$, will be:

$$v_o(p) = Z_c(p)\left(i_{PIN} + \frac{1 + R_8 C_8 p}{R_8} v_s \right) \tag{10}$$

where the transfer impedance $Z_c(p)$ can be written like [3]:

$$Z_c(p) = \frac{Z_o(p)}{1 - \frac{Z_o(p)}{R_{f_eq}}} \tag{11}$$

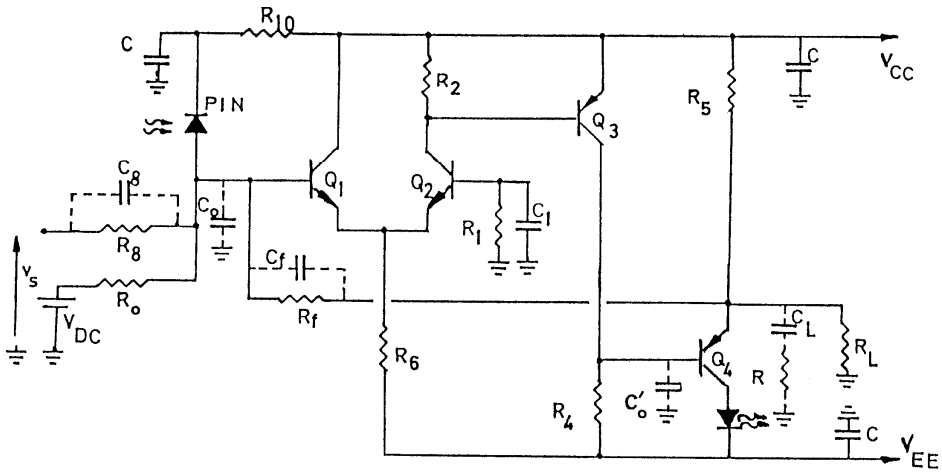

Figure 3. Drawing of the conventional repeater coupler, which is realized using discrete components [1]

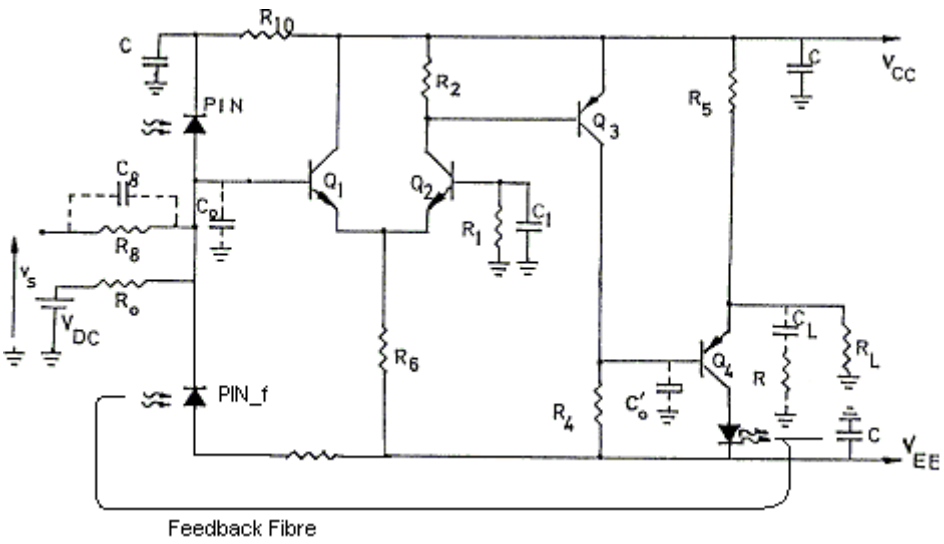

Figure 4. Drawing of the optically fed back repeater coupler, equivalent to the conventional unit

$Z_o(p)$ being the open loop transimpedance gain taking into account the loading effect of R_L. It has to be noted that R_{f_eq} could be considered as constant for a frequency band much larger than that of the electronic circuit.

$$Z_0(p) = -A(p)(R_{f_eq} // Z_i^{'}) \tag{12}$$

where A(p) is the open loop voltage gain of the amplifier and Z_i' is he amplifiers' open loop input impedance taking into account the source impedance and the equivalent feedback impedance R_{f_eq}.

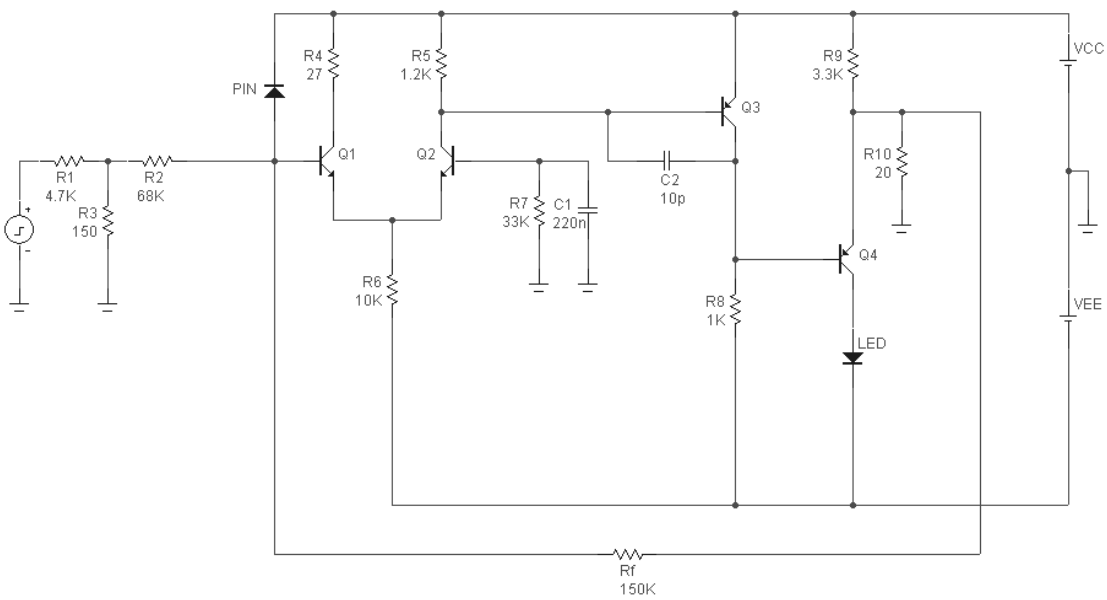

Figure 5. Circuit of the conventional repeater coupler,
as it has been realized using discrete components [1]

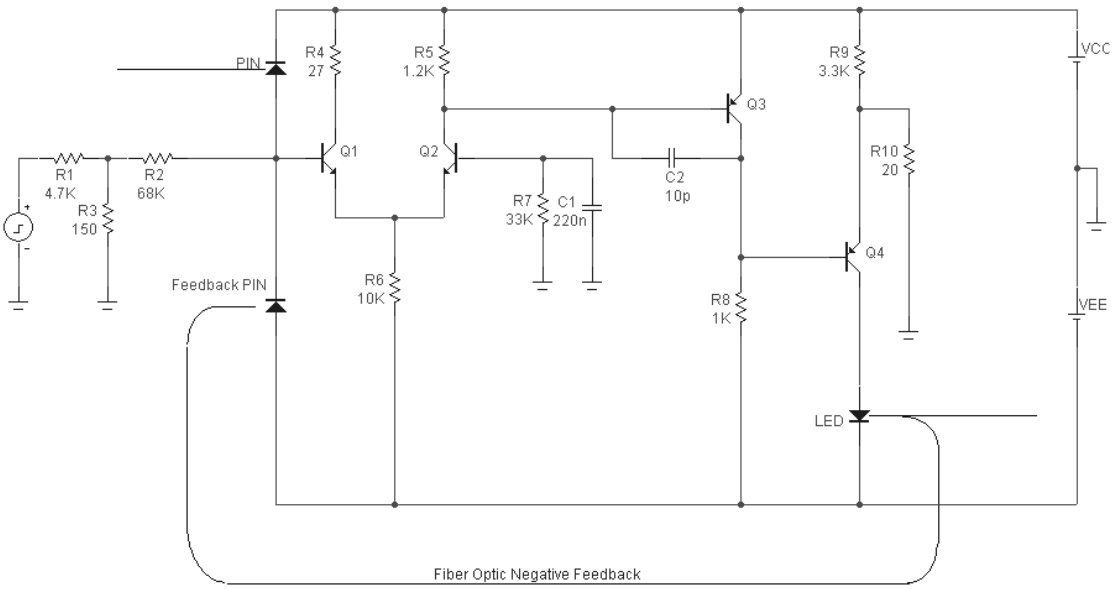

Figure 6. Drawing of the optically fed back repeater coupler, equivalent to the conventional unit

From this particular point the circuit design procedure is equivalent of the procedure followed for the conventional repeater-coupler [1].

2.2. EXPERIMENTAL CIRCUIT

The circuit with the fiber optic feedback has been realized with discrete components (Fig. 6) in equivalence to the circuit with feedback resistor (Fig. 5). The R_{f_eq}/R_L (or the R_{f_eq}/R_{10}) ratio takes into account the total link loss related to the input and driver currents. Since in the R_{f_eq} is not a real resistor, its noise contribution and the parasitic capacitance C_f, which was taken into consideration for the conventional circuit [1], are both considered being nil. The output signal is monitored between the leeds of the load resistor R_L (or R_{10}). As the signal to be coupled is in TTL format, it is inserted in the circuit through an attenuator network where $R_{att}(R_1, R_2, R_3)=R_8$. The resistor R_7 compensates the voltage drop due to the current I_{B1} and its value is $R_7= R_{f_eq} //R_0//R_8$. The offset voltage V_{DC} fixes a bias current to the LED for an AB class of operation.

Both circuits were assembled on an experimental fiber optic MILBUS-1773 (the fiber equivalent of the MILBUS – 1553 avionics data bus) 1MB avionics network mockup. The experimental results display a complete equivalence and interchangeability of the circuits (Fig.7). Te circuits display equivalent responses in a wide operation temperature range (-30^0 to $+60^0$C). The circuit operation is also perfectly stable in the temperature range it has been tested.

3. CONCLUSIONS

The theoretical analysis as well as the experimental results demonstrates the fiber optic feedback can perfectly substitute the feedback resistor of an analog optoelectronic repeater coupler. The elimination of the feedback parasitic capacitance the, the wideband of the fiber and the elimination of the noise in the feedback loop advantages the cascaded connections of many repeaters – couplers with fiber feedback, on medium speeds local fiber networks such as MILBUS-1773. It has however to be noted that the feedback coupling factor K_{opt} has very strict tolerances affecting the practical assembly process. Therefore it is advisable the use of an accurate optical attenuator for experimental purposes or the use of integrated optic path as a feedback. It must be highlighted that the circuit architecture is the most suitable for integration technologies and it goes without saying that the same design rules are valid for achieving much higher cutoff frequencies.

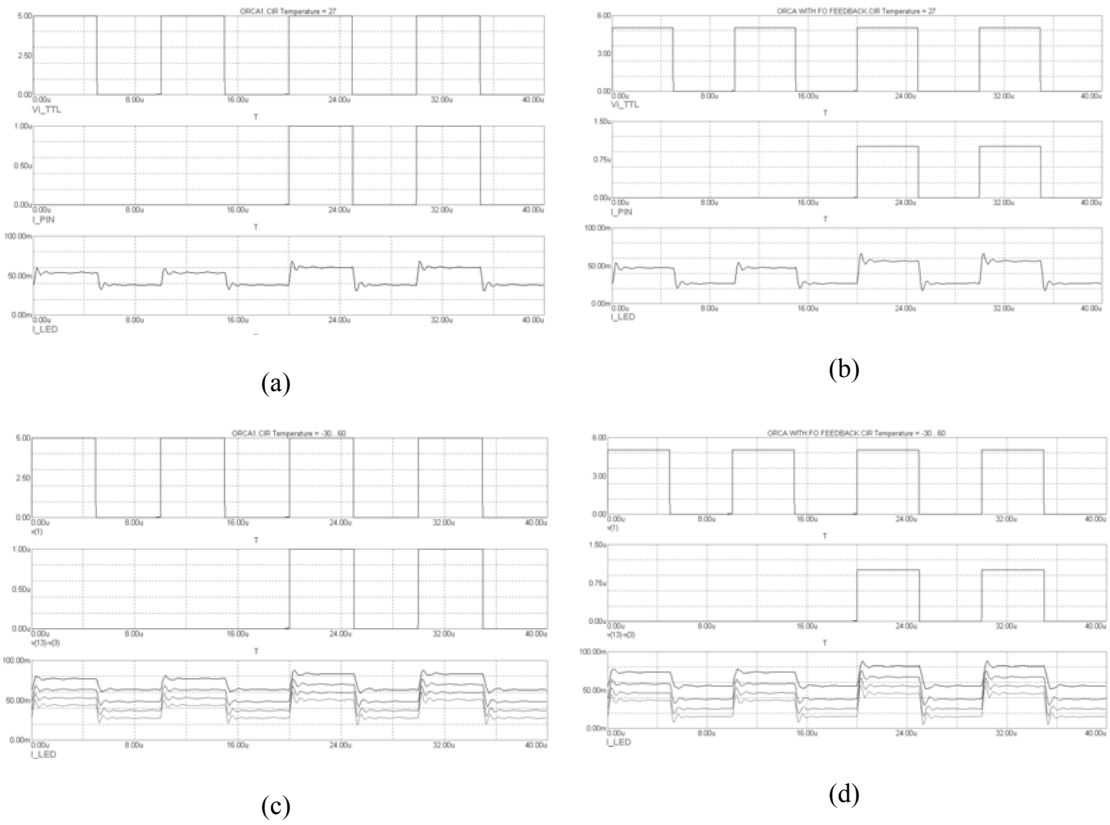

Figure 7. Comparative experimental results for both conventional resistance feedback repeater - coupler and fiber optic feedback repeater – coupler: (a)Transient response of the repeater – coupler with resistance feedback at 27^0C, (b) Transient response of the repeater – coupler with fiber optic feedback at 27^0C, (c) Transient response variation of the repeater – coupler with resistance feedback at temperature range of -30^0C - $+60^0$C, (d) Transient response variation of the repeater – coupler with fiber optic feedback at temperature range of -30^0C - $+60^0$C

REFERENCES

[1] E. O. Narlis *«Optoelectronic Repeater – Coupler – Active Device for Fiber Optic Local Area Networks»*, Journal of Applied Electromagnetics, Vol.4, No.1, Jan. 2002, pp.21 - 31.

[2] A. Alexandridis, E. O. Narlis, J. Boucher, Ch. Mantakas, *«Développement d'un Réseau Local a Fibres Optiques et a Multiplexage de Spectre Etale»*, Proceedings of OPTO – 87 International Conference, pp. 46 – 48.

[3] E. O. Narlis, M. Lescure, J. Boucher, *«Study of a Fiber Optic LAN with a Distributed Controller»,* Fiber and Integrated Optics, Vol.10, pp. 195 – 204.

[4] H. Hodara, E. Miles *«High Speed Local Area Networks »*, AGARD – LS – 184, Advances in Fibre-Optic Technology in Communications and For Guidance and Control, May 1992, pp. 3.1-3.12

[5] M. H. El-Diwani, J. Roulston, S. G. Chamberlain, *«Design of Low Noise Bipolar Transimpedance Preamplifiers for Optical Receivers»,* IEE Proceedings, Vol.128, Pt. G., No.6, pp. 299 – 305.

[4] J. Wilson, J. F. B. Hawkes, *«Optoelectronics»,* Prentice Hall, New York - 1989

[5] P. R. Gray, R. G. Meyer, *«Analysis and Design of Analog Integrated Circuits»,* John Willey, New york – 1984

[6] G. S. Forsberg, *«Optical Receiver with Optical Feedback»*, Electronic Letters, 23 Apr. 1987, Vol. 23, No. 9, pp.478 – 479

[7] B. L. Kasper, A. R. McCormick, C. A. Burrus, J. R. Talman, *«An Optical Feedback Transimpedance Receiver for High Sensitivity and Wide Dynamic Range at Low Bit Rates»*, Journal of Lightwave Technology, Vol. 6, No. 2, Feb. 1988, pp. 329 – 338

[8] S. G. Methley, *«Optical Receiver Employing 850nm Feedback»*, Electronic Letters, 23 June 1988, Vol. 24, No. 13, pp. 778 – 779

[9] S. G. Methley, *«-70dBm APD Optical Feedback Receiver at 2048MBits/s»*, Electronic Letters, 29 Sept. 1988, Vol. 24, No. 20, pp. 1259 – 1260

[10] S. G. Methley, *«An Optical Feedback Receiver with High Sensitivity»*, Proc. SPIE, Vol. 949, Fibre Optics, London, Apr. 1988, pp. 51 – 55