PERFORMANCE IMPROVEMENT OF MC-CDMA BASED FFT

Salih M. Salih *, N. Uzunoglou, A. A. Ali***, Waleed A. Mahmoud******

*, **School of Electrical and Computer Engineering, National Technical University of Athens
Division of Information Transmission Systems and Materials Technology
Microwave and Fiber Optics Laboratory, Athens/Greece
*E-mail: dr_salih_moh@yahoo.com
**E-mail: nnap@otenet.gr
*** Electrical and Electronic Department, University of Technology/ Baghdad/ Iraq
E-mail: draliaa@yahoo.co.uk
**** Electrical Department, University of Baghdad/ Iraq
E-mail: profwaleed54@yahoo.com

Abstract

In this paper, a proposed technique is used to improve the performance of Multicarrier-Code Division Multiple Accesses (MC-CDMA) based Fast Fourier Transform (FFT). The results are compared with the traditional technique for MC-CDMA. As a result, it can be seen from the proposed technique that a high performance improvement was obtained over traditional MC-CDMA, where the Bit Error Rate (BER) is widely reduced under the Additive White Gaussian Noise (AWGN), flat fading and frequency selective fading channel.

1. INTRODUCTION

The new scheme which combines wireless digital modulation and multiple accesses was proposed in the recent years, namely, OFDM-CDMA (Orthogonal Frequency Division Multiplexing-Code Division Multiple Access). In generally there are three types of hybrid schemes, e.g. MC/DS-CDMA (Multi-Carrier Direct Sequence CDMA), MC-CDMA and OFCDM (Orthogonal Frequency Code Division Multiplexing). The needing for the modulation technique that can transmit reliably high data rates at high bandwidth efficiency and multiple accesses leads the researchers to introduce the above techniques,

also due to enormous growth of wireless services (cellular telephones, wireless LAN, etc.),

The MC-CDMA scheme spreads the original data steam using spreading code and then modulates different carriers with each chip, i.e. spreading the chips in frequency domain and is the technique of interest to reader [1]. The second type spreads the serial to parallel converted streams using a spreading code and then modulates different carrier with each data stream, i.e., spreading in time domain [2]. The input data stream is spread using the spreading sequence which could be a Walsh-Hadamard code or a PN sequence, and the resultant chips after spreading the symbols are modulated into different subcarriers using the IFFT operator [3, 4]. The end few symbols are appended at the beginning of the frame to act as the cyclic prefix. The cyclic prefix maintains orthogonality between the subcarriers in a multipath channel [5]. The receiver first removes the cyclic prefix and then performs a FFT operation of the received symbols and brings them back to the frequency domain. Then despreading and decoding of the chips in frequency domain are performed for the traditional MC-CDMA. In the new proposed technique the spreading is done in frequency domain while the despreading at the receiver is doing in time domain and the channel estimation and compensation are the same, but they are performed after the output of the IFFT (New Block) at the receiver.

2. SIMULATION MODEL

The simulation model of the original MC-CDMA is shown in fig.(1) and the new proposed model is shown in fig.(2) for comparison. It can be seen from these graphs that a new two blocks was added at the transmitter and the other two at the receiver, namely; **FFT** and **Phase Matrix** (**PM**) blocks are added at the transmitter and **Inverse Phase of Matrix** (**IPM**) and **IFFT** at the receiver. The phase matrix blocks the error from spreading from any bit to other bits that does not contains error, the error spreading due to the mixing property of the FFT, which mixes both of signal phases and its amplitude

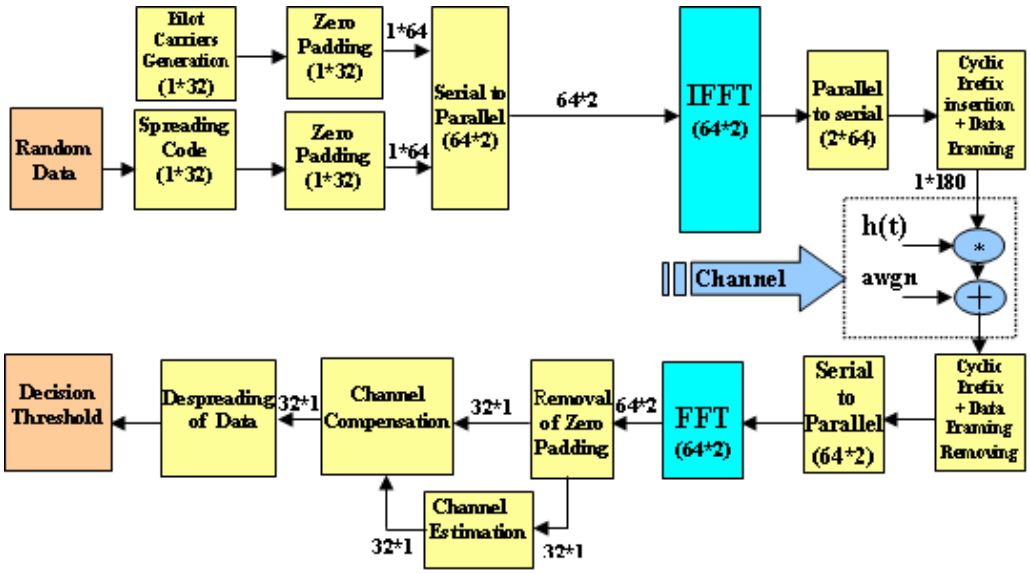

Figure 1. Traditional model for MC-CDMA

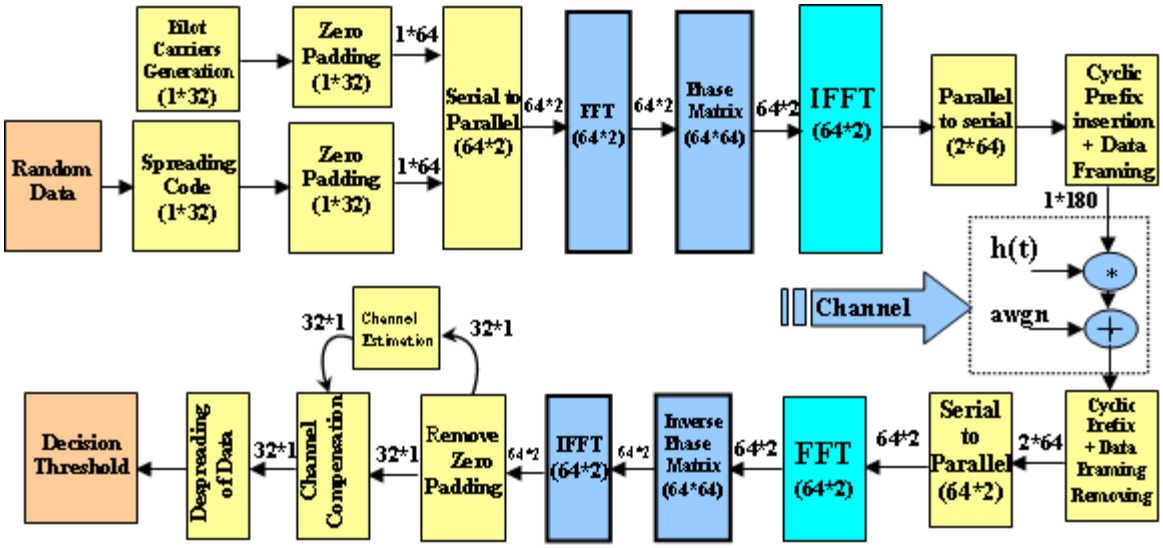

Figure 2. A proposed Model for MC-CDMA

3. PERFORMANCE ANALYSIS OF THE PROPOSED TECHNIQUE

From the block diagram of the transceiver shown in fig.(2), its assume that a binary data sequence are generated and modulate one bit for each packet of length (180 bit) that transmitted over the channel. A brief description of the simulation model shown in fig.(2) is described by the following steps:

1. The first four blocks it stay as the same that given in fig.(1) with:

a) A random bits are generated by a random source generator and every one bit are spreads at the second block with a user-specified spreading code [6]; (in this design every one bit are copied 32 times [7], which is equal to the Walsh-Hadamard code that used here (32 bits) and the output is the result of the Exclusive-OR of Walsh-Hadamard and the input bit. The output is a vector of length (1*32).

b) A zero padding of length (32 bits) is added to this vector to yields an output of (1*64) bits.

c) A pilot signal is generated of length (1*32) bits and zeros are padded to it of length (1*32) and the total pilot vector will be of length (1*64). For both of data and the pilot signal the zero padding are added at the middle of the vector, namely the zeros are added from 17:48 bits.

2. The data and training are processed at a **NEW BLOCK (FFT Block)** which is not found in the original MC-CDMA (fig (1)) to yields a 64*2 output data.

3. Now the data and training signal are multiplied by a **phase Matrix** of size **64*64** to give an output of 64*1 for each one as in the following equation:

$$x(n,i) = \sum_{v=0}^{N-1} x(n*N-(N-1)+v,i)\, e^{-j(2\pi/N).i.v} \tag{1}$$

where;

n: is the data bit number which is equal to the frame number.

i: is the frequency bin of the FFT or IFFT (from 1 to N)

N: the window size of FFT.

$x(\,.\,)$: is the output signal from the FFT

The Phase Matrix in Eq.(1) can be formulated for N=64 in the following fashion:

$$PM = \begin{bmatrix} e^{-j(2\pi/64)*0} & e^{-j(2\pi/64)*1} & e^{-j(2\pi/64)*2} & \cdots\cdots & e^{-j(2\pi/64)*63} \\ e^{-j(2\pi/64)*0} & e^{-j(2\pi/64)*2} & e^{-j(2\pi/64)*4} & \cdots\cdots & e^{-j(2\pi/64)*126} \\ e^{-j(2\pi/64)*0} & e^{-j(2\pi/64)*3} & e^{-j(2\pi/64)*6} & \cdots\cdots & e^{-j(2\pi/64)*189} \\ \vdots & \vdots & \vdots & & \vdots \\ e^{-j(2\pi/64)*0} & e^{-j(2\pi/64)*64} & e^{-j(2\pi/64)*128} & \cdots\cdots & e^{-j(2\pi/64)*4032} \end{bmatrix} \quad (2)$$

4. After that, the normal block which available in fig.(1) (IFFT block) is used to convert the pilot carrier (64*1) and data (64*1) from frequency domain to time domain, which gives an output of 64*2.

5. Now a cyclic prefix is added to the frame of length 26 bits for both pilot and data.

- **Cyclic Prefix**

It is known that in multi-path fading channel environment, channel dispersion causes the consecutive blocks to overlap, creating Inter-Symbol Interference (ISI) and Inter-Carrier Interference (ICI). This degrades the system performance. In order for the orthogonality of the OFDM or MC-CDMA sub-carriers to be preserved, a guard interval is inserted. Actually the guard interval can be realized by the insertion of zeros, but using the cyclic prefix as guard interval can transform the linear convolution with the channel into circular convolution [3].

The insertion of cyclic prefix is very simple. Assume the length of the guard interval is g, it is just pre-pended the last g samples to the original OFDM sample sequence at the transmitter. At the receiver the so-called guard interval is removed. The process is shown in Fig. (3). The length of the cyclic prefix is required to be equal to or longer than the maximum channel delay spread to be free from ISI/ICI. Even this is simple, but it reduces the transmission efficiency of the information bits.

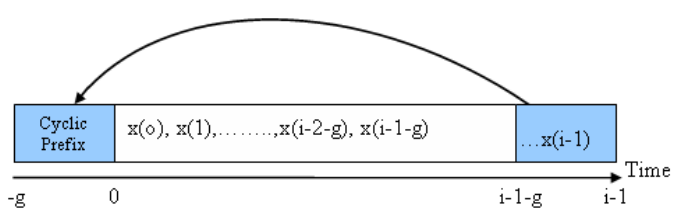

Figure 3. The structure of cyclic prefix

6. The data and the pilot signal are now being converted to a frame structure; the total frame will be of length 1*180 bit which transmitted over the channel. Before transmitting the signal and pilot carriers through the channel it must be scaled the mean value of both of them to be less than or equal to unity, such that the absolute mean value of them are more nearest the absolute mean value of the generated random noise by the matlab program. In this paper the transmitted mean value was scaled to 0.5 by dividing the transmitted vector by (2*absolute mean value of vector). This step leads to the best simulation results by matlab tool, where both of the transmitted signal and noise have the same mean value.
7. In this simulation a three types of statistical model of fading channels which are frequently used in the analysis and design of a communication systems, namely AWGN, flat fading and frequency selective fading channel. for more information reference [4, 5] had analyzed these types of channels
8. At the receiver the framing and a cyclic prefix are removed at the first block. A serial to parallel conversion is doing for the received signals, each vector of length 64*1.
9. A received data and the pilot signal are processed by the FFT block.
10. The data and the pilot signal are multiplied by the Inverse of Phase Matrix (IPM).

$$IFFT_{input} = FFT_{output} * IPM = (64*1)_{FFT} * (64*64)_{IPM} = 64*1 \qquad (3)$$

11. The output signal from the IPM is processed by the IFFT with a vector of length 64*1 for each of data and training signal, and is now converted to the time domain.
12. Remove the zeros that added at the transmitter for both of data and pilot signal.
13. The training sequence will be used to estimate the channel frequency response as follows:

$$H(k) = \frac{\mathrm{Re}\,ceived\ Training\ Sample(k)}{Transmitted\ Training\ Sample(k)} \qquad (4)$$

14. The channel frequency response will be used to compensate the channel effects on the data, and the estimated data can be found using the following equation:

$$Estimate.\,data = H^{-1}{}_{estimate}(k) * \mathrm{Re}\,ceived.data(k) \qquad (5)$$

15. Finally the signal is Exclusive Ored (XOR) with a Walsh-Hadamard of the same transmitter user code, and the detection threshold decision is used to decide the value of signal.

4. SIMULATION RESULTS

In this section, the combination of conventional MC-CDMA with the proposed MC-CDMA was studied, the Walsh-Hadamard (code 20) have been used. The simulation of the two systems have been made using MATLAB 7, and the BER performance of the three systems was studied in different channel models which are AWGN, flat fading and frequency selective fading channel. Table (1) shows the parameters of the system that used in the simulation, the simulation work on 5 Mbps.

Table 1 Simulation Parameters

Spreading Code	Walsh-Hadamard
Number of sub-carriers	32
Channel model	AWGN
	Flat fading+AWGN
	Frequency selective fading+AWGN

4.1 Performance of the Proposed System in AWGN Channel

In this section, the channel is modeled as an Additive White Gaussian Noise for wide range of SNR from 0dB to 40dB, from fig.(4), it's found that the proposed system MC-CDMA does worked with a BER=10^{-4} at SNR= 4 dB at the receiver in this model of channel while in the traditional MC-CDMA the bit error rate is 10^{-4} when the SNR=23dB, which means the gain of the proposed model is about 20 dB at the AWGN channel in comparing with the traditional model, also there are a wide span gain area for all SNR values between the two models.

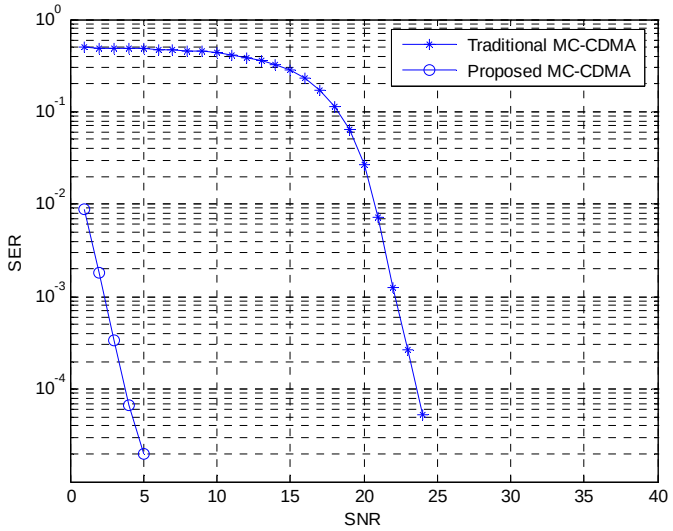

Figure 4. Performance of the proposed and traditional MC-CDMA in AWGN channel

4.2 Performance of the Proposed System in Flat Fading Channel

The simulation results for both systems in flat fading channel are shown in fig.(5). Three values of the Doppler frequencies (fd) are considered in this simulation, these are fd=5 Hz, 500 Hz and 1100 Hz respectively. From this figure it can be seen that the proposed MC-CDMA is still performs better than the traditional MC-CDMA in all values of the Doppler frequencies, where it approaches the BER=10^{-4} at SNR=28 dB and 33 dB when the Doppler frequencies are 5 Hz and 500 Hz. The BER increases as the Doppler frequency increases in both models. The traditional MC-CDMA is less sensitive to the variation of the Doppler frequency than the proposed one. For a BER=10^{-2}, the SNR=11-12 dB for the proposed model in comparing with 32.5-34 dB for the traditional system which means the gain is more than 21 dB was obtained from the proposed model in all values of the Doppler frequencies.

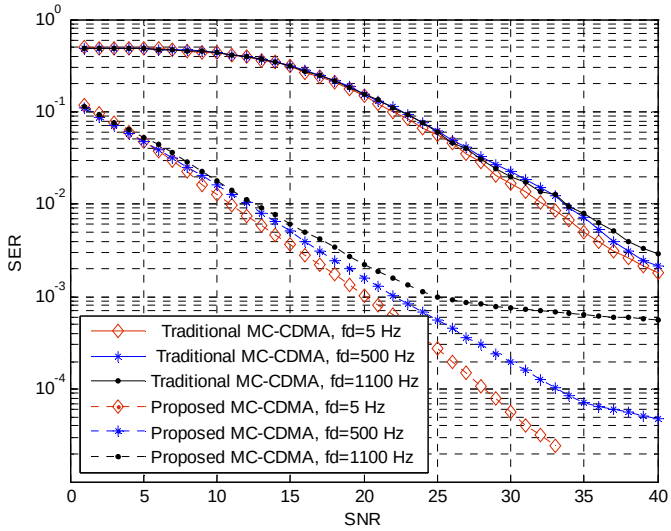

Figure 5. Performance of the proposed and traditional MC-CDMA in flat fading channel (fd=5 Hz, 500 Hz and 1100 Hz)

4.3 Performance of the Proposed System in Selective Fading Channel

In this type of channel, the frequency components of the transmitted signal are affected by uncorrelated changes, where the parameters of the channel in this case corresponding to multipath, the two paths are chosen, the Line of Sight (LOS) and second path which is the reflected bath.

In selective fading channel many models have been taken consideration to compare the BER performance of these systems, the influence of the attenuation, delay and maximum Doppler shift of the echo is successfully discussed.

First, the Doppler shift parameter has been taken in interest, the model that have been used in the simulation set the Doppler shift to 5 Hz, 500 Hz and 1100 Hz. The path delay has been set to 1 sample and the path gain to -8dB.

It is seen that from fig (6) the proposed MC-CDMA is still performs better than traditional MC-CDMA. The SNR at a BER of 10^{-4} for the new one is about 17 dB at Doppler frequency=5 Hz, while it is 38 dB for the original MC-CDMA, this means a gain of about 24 dB is obtained by the new way over the original system and this value is much active in the communications systems. As the Doppler frequency increases from 5

Hz to 500 Hz and 100 Hz the losses increases for both systems even the proposed model has butter performance than the traditional model, the gain in both cases is about 19 dB.

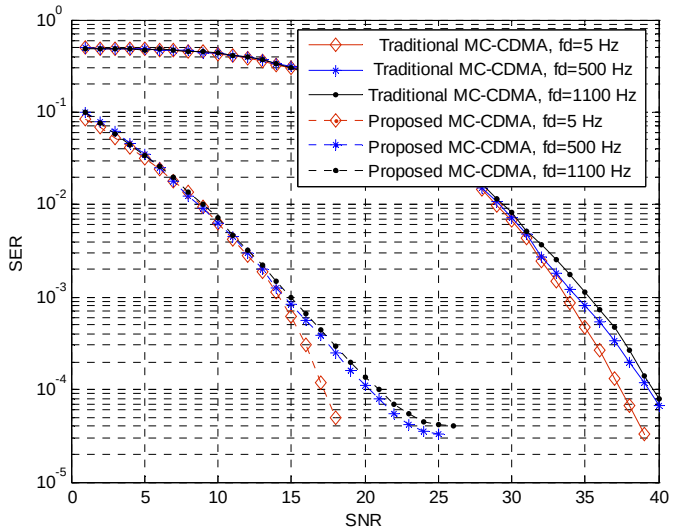

Figure 6. Performance of the proposed and traditional MC-CDMA in frequency selective fading channel (fd=5 Hz, 500 Hz and 1100 Hz, path gain=-8 dB, path delay=1 sample)

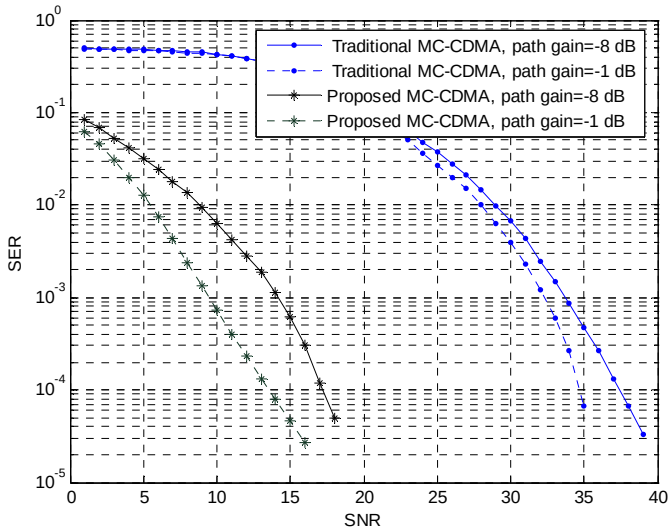

Figure 7. Performance of the proposed and traditional MC-CDMA in frequency selective fading channel (fd=5 Hz, path gain=-8 dB and -1 dB, path delay=1 sample)

The last parameter that can be checked is the path gain for the reflected path, the values are checked at maximum Doppler shift of 5 Hz, and a path gain (-1 and -8 dB) respectively. The results are shown in fig.(7). Its clear form these results the effect of increasing the path gain for the reflected path on the performance of both systems. The

SNR required achieving a BER at 10^{-4} is decreased for both of them as a path gain is changed from -8 dB to -1 dB.

In all cases, the BER increases as the Doppler frequency increases and more power losses does appeared at the receiver for the proposed and the traditional MC-CDMA under flat fading over the selective fading channel.

5. **CONCLUSION**

The simulation of the proposed and traditional MC-CDMA systems has been investigated. It has been shown that the new algorithm is widely active to work under different channel characteristics. A gain of 20 dB was obtained from the proposed model at the AWGN channel type and the frequency selective fading channel compared with a 23 dB loss at BER=10^{-4} for the traditional MC-CDMA. A wide span gain was obtained at the flat fading channel. The proposed MC-CDMA is more active to work under different path gain values of the reflected path.

REFERENCES

[1] Yee N., Linnartz J-P and Fettweis G. “Multicarrier CDMA in Indoor Wireless Radio Networks,” Proc. Of IEEE PIMRC 1993, Yokohama, Japan, Sept. 1993, pp. 109-13.

[2] DaSilva V.M. and Sousa E.S. “Performance of Orthogonal CDMA Codes for Quasi-Synchronous Communications Systems,” Proc. of IEEE ICVPC 1993, Ottawa, Canada, pp. 995-99, Oct 1993.

[3] Hara S. and Prasad S. “Overview of Multicarrier CDMA,” IEEE Communication Magazine, Vol. 35, No. 3, pp. 126-133, Dec 1997.

[4] Saad Nihad abdul-Majeed “A Multiwavelet Based MC-CDMA System,” Ph.D. thesis ,College of Engineering, Baghdad University, 2006.

[5] Mustafa S. A. “Design and Implementation of Orthogonal Frequency Division Multiplexing Transceiver on TMS320C6711,” Ph.D. thesis, College of Engineering, Baghdad University, 2004.

[6] K. Fazel and S. Kaiser “Multi-Carrier and Spread Spectrum Systems,” 1st Edition, John Wiley & Sons, 2002.

[7] Kit Ming Tommy Chee "Hyprid OFDM-CDMA: A Comparision of MC/DS-CDMA, MC_CDMA and OFCDM," Dept. of Electrical and Electronic, Adelaide University, SA 5005, Australia, 2002.