SOME POSSIBILITIES FOR OPTIMISATION OF APPLICATION OF GIRDLE COIL IN MAGNETO-THERAPY

Atanas Dimitrov, Sasho Guergov

Technical University of Sofia
1000 Sofia, 8, Kliment Ohridski str.

sguergov@tu-sofia.bg

Abstract

The girdle coils are often used in magneto-therapy. The basic advantage of this coils is possibility for providing of influence of low frequency magnetic field on big part of the human body. In addition it's easy to provide movement or / and static disposition of the girdle coil on axis of the human body. During the procedures of therapy usually both the axis of girdle coil and axis of human body are parallel. It's well known that both the axis of vector of magnetic induction for more of the points in the middle are of the girdle coil and axis of coil are the same or parallel. It's well known that the influence of magnetic field is first of all on the movement of ions of blood. In the case of ordinary application of girdle coil , the direction of movement of blood in the big blood vessels in the human body, in the hand and in the legs would be also parallel of the direction of magnetic induction or the angle between vector of magnetic induction and direction of movement of blood in the big blood vessels in the human body, in the hand and in the legs would be too small. Therefore the results of therapy using ordinary girdle coil are not optimal. This is the biggest disadvantage of allocation of girdle coil in magneto-therapy. The goal of this paper is to present some possibility for optimization of application of girdle coil in magneto-therapy.

1. INTRODUCTION

The magnetic device (girdle coil) which is constructed for use as a therapeutic tool in magneto-therapy can be seen on Fig. 1. Usually both the axis Z of girdle and axis of human body are parallel. The current in girdle coil is I and the radius of girdle coil is R. The space-temporal configuration of low frequency magnetic field in the patient's area is very important in the process of magneto-therapy [1,2]. Therefore the precise calculations of low frequency magnetic field as well as an easy-understand visualization of field distribution over the patient's area are of great importance for the reliability and predictability in the process of experimental measurement of magnetic induction of the constructed electromagnetic device.

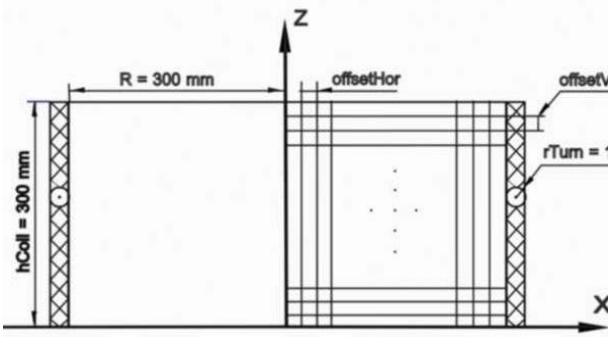

Fig.1. Girdle coil

The calculation exposes a low frequency magnetic field solver that allows evaluating the field strength throughout the volume influenced by the coil [1,2,3]. The presented article illustrates one approach to calculate and visualize a low frequency magnetic field distribution in 2D.

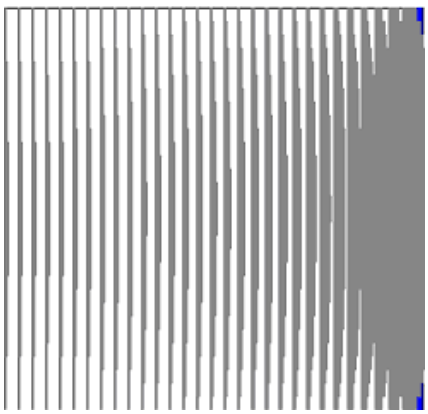

Fig. 2. Experimental histogram of the module of magnetic induction in the case of static activation of the girdle coil

The histogram of experimental measurements of amplitude of the module of magnetic induction in the plane *XOZ* (Fig. 1) can be seen on Fig. 2 [1,3]. It's clear that this histogram is constant in the time. Because of that there is possibility for fast adaptation of patients to parameters of low frequency magnetic field during process of therapy. This is the second disadvantage of application of ordinary

girdle coil. For experimental investigation a small coil (diameter $d = 8mm$, height $h = 10mm$ and current turns $w = 2x300$) has been used as sensor for measurement of the value of magnetic induction. This coil has been connected with the inputs of differential amplifier in the input of apparatus for measurement of magnetic induction of low frequency magnetic field. The measurement has been done for the sinusoidal current in the girdle coil with frequency $f = 50Hz$. It's well known that the frequency band $f = 10Hz - 100Hz$ is used in the process of magneto-therapy. The sensor has been putted in different points around the girdle coil. The mechanical construction of the girdle coil with the main mechanical sizes can be seen on Fig. 3.

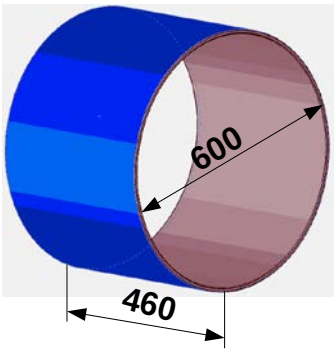

Fig. 3. Mechanical construction of girdle coil

2. ON OPTIMIZATION OF APPLICATION OF GIRDLE COIL IN MAGNETOTHERAPY

Taking in account Fig. 3 it's clear that mechanical construction of girdle coil is hard. Because of that the optimisation of application of girdle coil would be possible only on the base of optimisation of space temporal function of current in the coil. One new method in physiotherapy is simultaneously application of low frequency magnetic field together with mineral water. The application of low frequency magnetic field provide increasing of the module of velocity of ions in the liquids of human body (first of all ions of the blood). Because of that there is increasing of the velocity of biochemical processes in the body. When the human body is in the mineral water (Fig. 4) there is diffusion of components (ions) of mineral water through the skin [4,5,6]. Therefore there is biochemical processes in the human body with participation of ions of mineral water. As results the simultaneously application of low frequency magnetic field together with mineral water protects therapy by mineral water.

Fig. 4. Application of girdle coil is in the process of magneto-therapy together with mineral water

During of above described process of simultaneously therapy by mineral water and low frequency magnetic field it's necessary to be avoided adaptation of patient's body to the influence of magnetic field [7,8]. In this case it would be possible to provide more long process of therapy and to obtain more good effect of therapy. The adaptation of patient's body to the influence of low frequency magnetic field can be avoided if there is "movement" of magnetic field during the therapy. This "movement" would be one optimisation of application of girdle coil in magnetotherapy. This optimisation can be provided if the construction of girdle coil consists several part one the one axis and if every part create independent low frequency magnetic field. This construction of girdle coil can provide "movement" of low frequency magnetic field on the axis of the coil.

3. GIRDLE COIL WITH "MOVEMENT" OF MAGNETIC FIELD

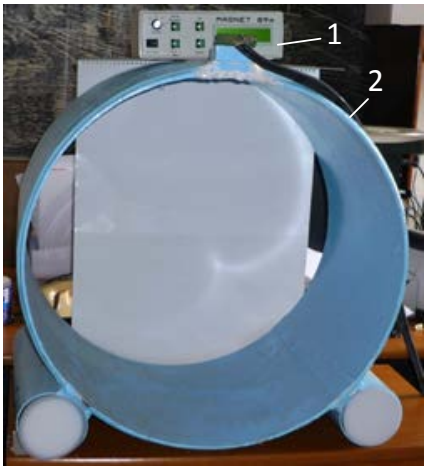

Fig. 5. Girdle coil with "movement" of low frequency magnetic field on the coil's axis

The construction of girdle coil (2) with "movement" of magnetic field and electronic unit (1) for magnetic field management can be seen on Fig. 5. As mentioned above, the therapeutic outcome may be improved by providing the possibility of changing the parameters of the effecting magnetic field if appropriate periodic magnetic signals are used. When applying a girdle coil, this can be provided by sectioning the coil and sequentially agitating the individual sections in a pre-selected order. These types of coils could be used to provide the "waving wave" mode by sequential or pseudo-random excitation of the individual coil sections. For this case of a multilayer coil, the calculation of the magnetic field is performed for a separate section. Because the coil contains 5 sections activated sequentially, the visualization is based on once-calculated and stored data and reproduces an identical picture of the field but displaced along the Z axis (Fig. 1). Figure 6 (a, b, c, d, e) shows the results of the field calculation for each of the 5 identical sections. The field preview is animated to match the coil section of the coil sections.

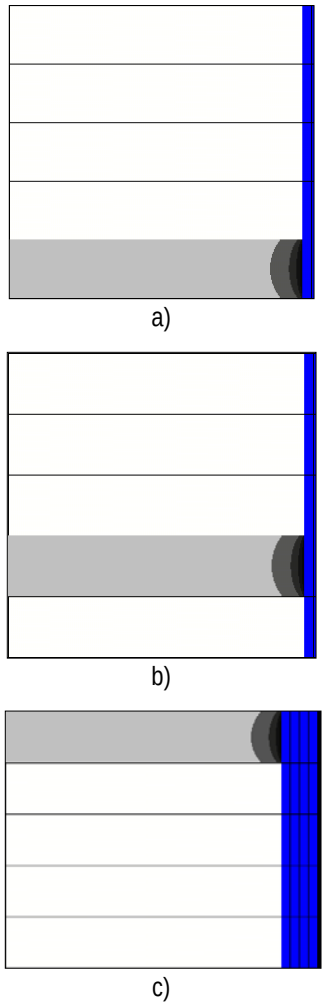

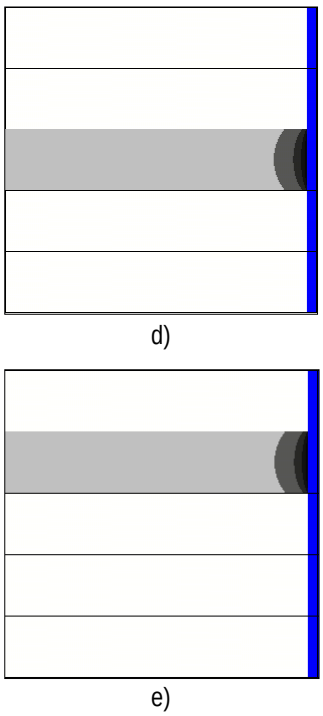

Fig. 6. "Running" magnetic field mode for a sectioned girdle coil

4. CONCLUSION

The proposed sectioning of the girdle coil (Fig. 5 and Fig. 6) ensures the improvement of the therapeutic results due to the periodic variation of the coil parameters (the switching of the individual sections). At the same time, each of the coil sections has a reduced inductance, and only one section is always included. Therefore, coil segmentation ensures that the inductor is energized with lower voltage. Each of the coil sections also has a reduced time constant, which greatly relieves the switching of the sections. Therefore, the proposed construction of girdle coil has certain advantages over the "classic" girdle coil. In fact this is the result of optimisation of application of girdle coil in magnetotherapy. Of course, it must be said that the magnetic wave can "run" only on the coil axis. This is a serious constraint in the process of changing the spatial configuration of the magnetic field in the therapy process.

8. ACKNOWLEDGMENTS

The authors would like to thank the Research and Development Sector at the Technical University of Sofia for the financial support.

REFERENCES

[1] Dimitar Tz. Dimitrov, "Computer simulation of space configuration of low frequency magnetic field in magnetotherapy", Journal Electronics and Electrical Engineering, Lithuania, ISSN 1392–1215, No3/59, 2005, p.28-32.

[2] Dimitar Tz. Dimitrov, "Improving the Performance of Program Package for 3D Simulation of Low Frequency Magnetic Field in Medical Therapy", Journal Electronics and Electrical Engineering, Lithuania, ISSN 1392-9631, 2007, No.1(73), p.69-72

[3] Dimitar Tz. Dimitrov, "Visualization of a Low Frequency Magnetic Field, generated by Girdle Coil in Magnetotherapy´, Journal "Electronics and Electrical Engineering", Litvania, ISSN 1392-1215, 2007, No.6(78), p.57-60.

[4] Dimitar Tz. Dimitrov. Veska Georgieva, "Application of Apparatus for Magneto Therapy in Stomatology and Computer Treatment of X-ray Images before and after Therapy", Journal "Electronics and Electrical Engineering", Litvania, 2009, No.3(91), ISSN 1395-1215, p.39-43.

[5] Dimitar Tz. Dimitrov, "Wireless module for distance measurement of patient's temperature in hospitals", Journal "Electronics and Electrical Engineering", Litvania, 2008, No.2(82), ISSN1395-1215, p.53-58.

[6] Dimitar, Tz. Dimitrov, Simultaneously influence of magnetic and electrical field on the human body, Journal "Electronics and Electrical Engineering", Litvania, 2008, No.7(87), ISSN1395-1215, p.77-80.

[7] Dimitar Tz. Dimitrov, Comparison between application of girdle coil and several local inductors in magnetotehrapy, Proceedings of 14th International Conference "Communication, Electromagnetics and Medical Application CEMA'19", ISSN 1314-2100, Sofia, October 17th-19th , 2019, p.40-44.

[8] Dimitar Tz. Dimitrov, Nikola Ralev, Signals and Systems for Electrosleep, Journal "Electronics and Electrical Engineering, ISSN 1392-1215, No.5(93), 2009 , p.95-98.